One Glue That Should Be in Everyone's Shop

Learn the Secrets to Perfect-Fitting Miters

Woodsmith®

Woodsmith.com

Vol. 32 / No. 188

SLIDING-DOOR CABINET
2 PROJECTS IN 1

INSIDE!

Discover a New Tool for Perfect Joinery

One Step, Wipe-On Finish that Looks Great

A Publication of August Home Publishing

looking inside

Table of Contents

from our readers
Tips & Techniques 4

all about
Super Glues 8
We'll show you why it pays to keep this versatile adhesive on hand in your shop.

tools of the trade
Oscillating Spindle Sanders 10
If you want smooth, consistent curves with less work, this is the tool that will get it done.

jigs and fixtures
KM-1 Kerfmaker 12
This set-up tool from *Bridge City* will help you cut joinery with dead-on accuracy.

techniques from the shop
Cutting a Mortise 14
Here's a tried-and-true technique for making accurate mortises with maximum efficiency.

tips from our shop
Shop Notebook 28

woodworking technique
Flawless-Fitting Miters 42
Learn some tips and tricks that will guarantee a perfect fit when cutting this essential joint.

finishing room
Penetrating Oils 46
There are lots of good reasons why this is the only finish many woodworkers put their trust in.

details of craftsmanship
Loose-Wedge Mortise & Tenons . . .48
These handcrafted joints offer a sturdy, traditional option for "knock-down" construction.

in the mailbox
Q & A 50

hardware and supplies
Sources 51

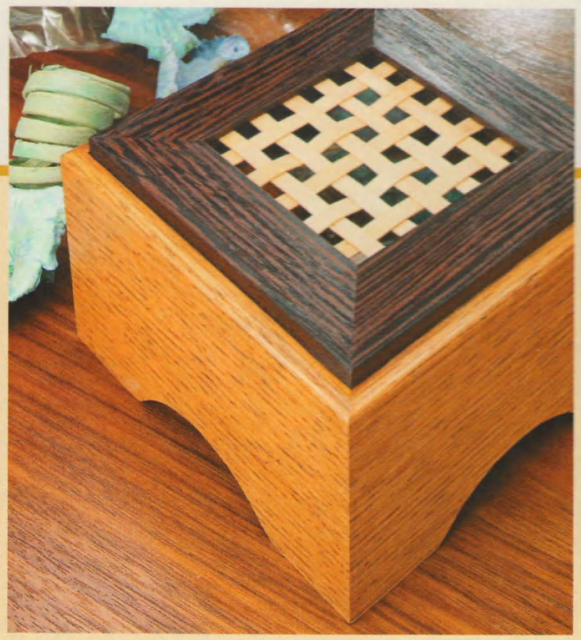

Potpourri Box page 16

Accent Table page 20

projects

weekend project

Potpourri Box 16

Who says a small project can't be packed full of interesting woodworking? What you won't find is a large investment in time and materials.

designer series project

Veneered Accent Table 20

Featuring a pattern-veneered top and subtle details, this accent table is sure to attract more than its share of attention.

heirloom project

Sliding-Door Display Cabinet 30

This beautiful cabinet is a true classic. The appearance is tastefully traditional while the construction and function are very up-to-date.

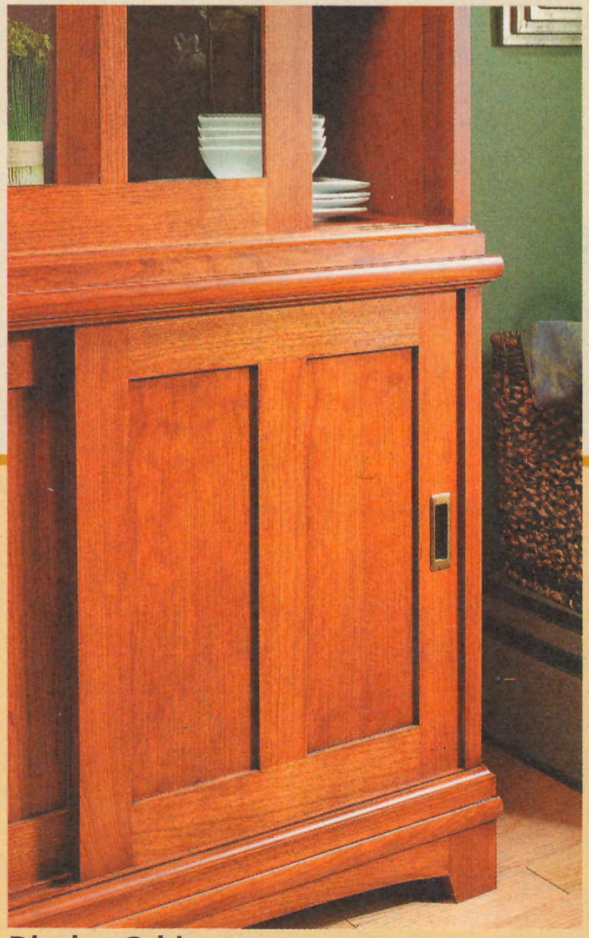

Display Cabinet page 30

editor's note

Sawdust

With as many projects as we've built over the years, it can sometimes be difficult to see what makes each one unique. After all, a table is a table, a bookcase is a bookcase, and so on. But it's not always the end use of a project that I find interesting. Often, it's one particular aspect of the construction or the design.

Take the accent table in this issue, for example. At first glance, it looks like nothing more than a simple table — four legs, some aprons, a top, and a shelf. But step a little closer and you'll see that there's more going on here. The top of the table is veneered in a striking, reverse-diamond pattern. This is a quick way to turn a ho-hum project into something spectacular.

And from a woodworking perspective, the veneered top (and shelf) add a new level of interest. Matching the four pieces of veneer into a square and then adding the inlay strip and veneer banding is a worthy challenge. But don't let all this intimidate you. We've included a detailed explanation of the process, along with a number of tips to help make it easier.

Speaking of tips, for several years now we've offered something we call "E-tips." By simply signing up online, you receive a free woodworking tip each week via email. Ever since we started sending out E-tips, they've been extremely popular.

Well, not too long ago, we took this idea and expanded upon it by adding two new features. In addition to the regular, weekly tip, we've added a video tip. Each of these short videos demonstrate a woodworking technique or time-saving tip that you can put to use in your shop. Sometimes, being able to see something demonstrated in live action makes it a lot easier to understand.

Along with the weekly tips and video tips is another new feature — special previews and offers from both *Woodsmith* and *ShopNotes* magazines. If you'd like to sign up to receive these weekly tips, just go to **Woodsmith.com.**

Terry

This symbol lets you know there's more information online at Woodsmith.com. There you'll see step-by-step videos, technique and project animation, bonus cutting diagrams, and a lot more.

Tips & Techniques

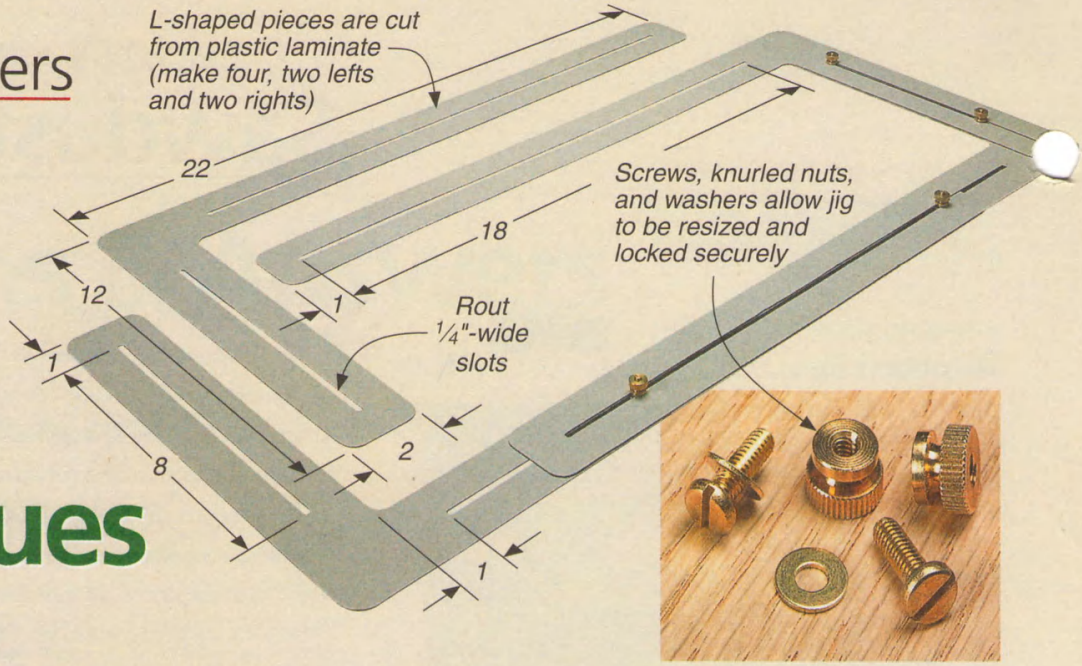

Layout Jig

When laying out workpieces for a project, I like to make sure they will all have the best appearance. But it's sometimes difficult to visualize what the grain of the finished piece will look like. So I devised this simple layout jig you see in the photo below.

The jig helps you "frame" the workpiece for the best look before cutting it out. The jig is made from scraps of plastic laminate that I cut four L-shaped pieces (drawing above). I routed a slot down the middle of each leg. Then the pieces are held together with screws, washers, and knurled nuts (inset photo above).

To use the jig, loosen the nuts and move the L-shaped pieces so that the inside dimensions match the finished dimensions of the workpiece. Then tighten the nuts to hold it.

Now you can move over to your stock. Place the jig on the board and move it around until the best grain pattern for the workpiece appears in the "window." You'll want to take your time and experiment with different positions before deciding on the best option. Then just use your pencil to trace out the finished piece.

This jig has proven so useful I also use it for selecting the best-looking panels for doors. Finally, the jig comes in handy when I use hardwood plywood or veneer for a project. I can home in on the perfect-looking piece.

Bryan Nelson
West Des Moines, Iowa

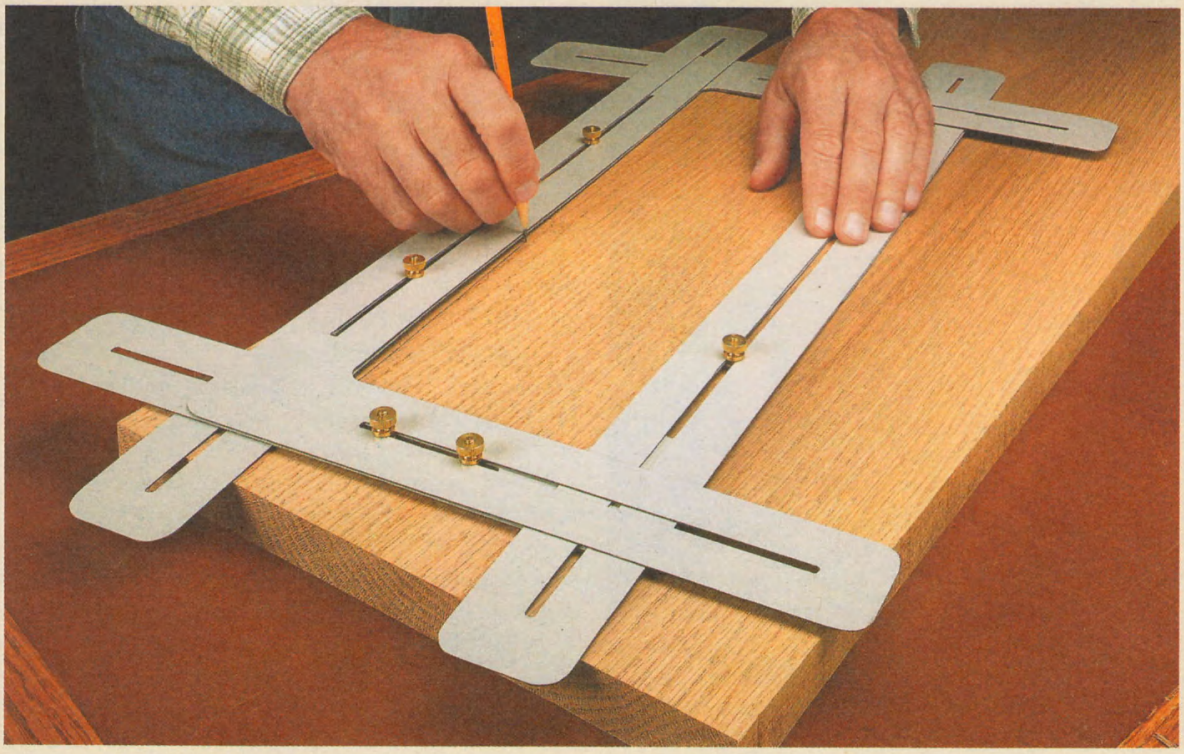

Anti-Racking Device

Whenever I clamp a piece vertically at one end of my vise, I have problems with the vise mechanism racking. To prevent this, I clamp a scrap the same thickness at the other end of the vise. But clamping the scrap and the workpiece at the same time can a challenge.

The photo at right shows how I solved this problem. A length of dowel slipped through a hole drilled in the scrap holds it in place while I tighten the vise.

Ken Harrington
Herndon, Virginia

Save That Varnish

I rarely use all the varnish in the can on a single project. I do my best to replace the lid tightly to preserve the unused portion. But when I open the can, there's a film over the top because of air in the can.

However, I found a way to get the air out and seal the can all at once. A vacuum freezer bag system (available at most discount stores) does the trick.

To seal the can in a bag and remove all the air in the process, I put the can in the bag and hold one side of the lid up. Then I attach the pump to the bag and as it vacuums the air out of the can and bag, the lid closes down tight. As a bonus, there's a place on the bag where I can write the date that I sealed the varnish.

Now when I reopen a can of varnish, it's as fresh as the first time. The hard skin is an annoyance of the past.

Harold Christensen
Wildwood, Missouri

SUBMIT YOUR TIPS ONLINE

If you have an original shop tip, we would like to hear from you and consider publishing your tip in one or more of our publications. Go to:

Woodsmith.com
Click on the link,
"SUBMIT A TIP"

You'll be able to tell us all about your tip and upload your photos and drawings. You can also mail your tips to *"Woodsmith Tips"* at the editorial address shown at right. We will pay up to $200 if we publish your tip.

FREE TIPS BY EMAIL

Now you can have the best, time-saving secrets, solutions, and techniques sent directly to your email inbox. Just go to **Woodsmith.com** and click on ***"Sign Up for Free E-Tips."*** You'll receive one of our favorite tips each week.

Woodsmith®

No. 188 April/May 2010

PUBLISHER Donald B. Peschke

EDITOR Terry J. Strohman
MANAGING EDITOR Vincent Ancona
SENIOR EDITOR Ted Raife
ASSOCIATE EDITOR Dennis Perkins
ASSISTANT EDITOR Carol Beronich
CONTRIBUTING EDITORS Bryan Nelson, Phil Huber, Randall A. Maxey, Joel Hess, Catherine Seiser

EXECUTIVE ART DIRECTOR Todd Lambirth
SENIOR ILLUSTRATORS David Kreyling, Dirk Ver Steeg, Harlan V. Clark, Peter J. Larson, David Kallemyn
SENIOR GRAPHIC DESIGNER Bob Zimmerman
GRAPHIC DESIGNER Shelley Cronin
GRAPHIC DESIGN INTERN Megan Schlemmer

CREATIVE DIRECTOR Ted Kralicek
SENIOR PROJECT DESIGNERS Ken Munkel, Kent Welsh, Chris Fitch, Jim Downing, Mike Donovan
PROJECT DESIGNER/BUILDER John Doyle
SHOP CRAFTSMEN Steve Curtis, Steve Johnson
SENIOR PHOTOGRAPHERS Crayola England, Dennis Kennedy
ASSOCIATE STYLE DIRECTOR Rebecca Cunningham
SENIOR ELECTRONIC IMAGE SPECIALIST Allan Ruhnke
PRODUCTION ASSISTANT Minniette Johnson
VIDEO EDITOR/DIRECTOR Mark Hayes, Nate Gruca

Woodsmith® (ISSN 0164-4114) is published bimonthly (Feb., Apr., June, Aug., Oct., Dec.) by August Home Publishing Company, 2200 Grand Ave, Des Moines, IA 50312.
Woodsmith® is a registered trademark of August Home Publishing.

Copyright© 2010 August Home Publishing Company. All rights reserved.

Subscriptions: Single copy: $4.95.
Canadian Subscriptions: Canada Post Agreement No. 40038201. Send change of address information to PO Box 881, Station Main, Markham, ON L3P 8M6.
Canada BN 84597 5473 RT
Periodicals Postage Paid at Des Moines, IA, and at additional offices.
Postmaster: Send change of address to *Woodsmith*, Box 37112, Boone, IA 50037-2112.

WoodsmithCustomerService.com

ONLINE SUBSCRIBER SERVICES

- **VIEW** your account information
- **RENEW** your subscription
- **CHECK** on a subscription payment
- **PAY** your bill
- **CHANGE** your mailing or e-mail address
- **VIEW/RENEW** your gift subscriptions
- **TELL US** if you've missed an issue

CUSTOMER SERVICE Phone: 800-333-5075

SUBSCRIPTIONS
Customer Service
P.O. Box 842
Des Moines, IA 50304-9961
subscriptions@augusthome.com

EDITORIAL
Woodsmith Magazine
2200 Grand Avenue
Des Moines, IA 50312
woodsmith@woodsmith.com

AUGUST HOME PUBLISHING COMPANY

Printed in U.S.A.

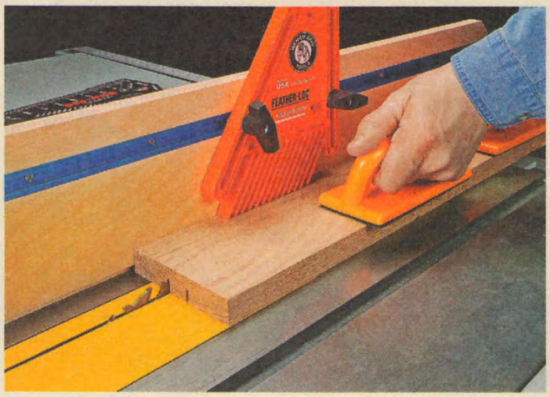

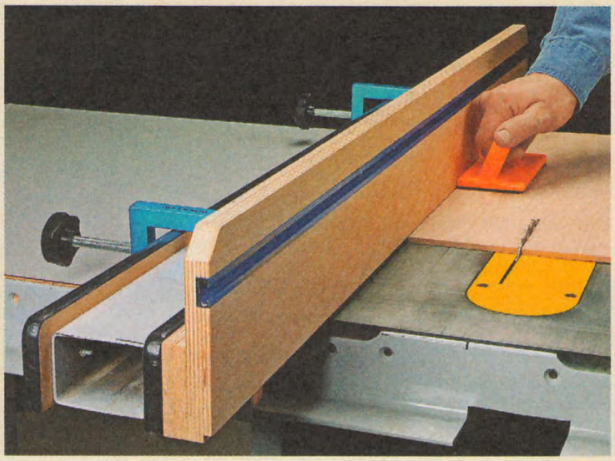

Auxiliary Fence

An auxiliary fence is a must-have if you're cutting rabbets or thin strips on a table saw. When I built this one, I intended to use it to protect my rip fence during those types of cuts. But after making some improvements to the basic fence, I decided to make it a permanent fixture.

The fence starts out with a piece of plywood. Then I added a rabbet on the lower edge to trap thin workpieces. A length of T-track holds a featherboard (left photo). Finally I attached the fence to a clamping board with screws (detail 'a' below).

Art Outlaw
Evansville, Indiana

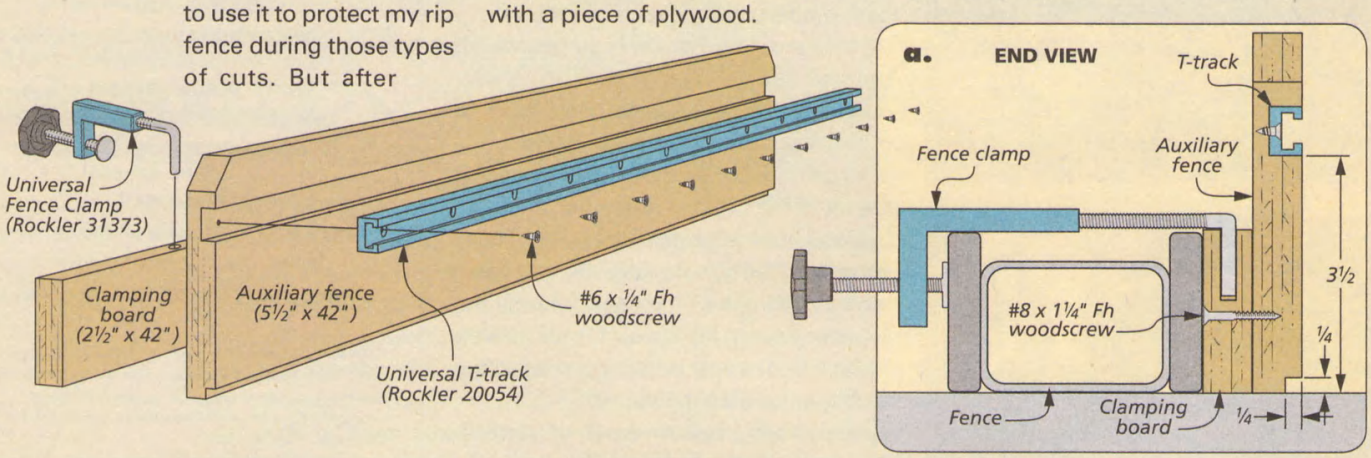

Bar Clamp Stands

If you've ever tried to balance clamps and a panel while applying edging, you know it can be a challenge. Especially when the clamps tip over.

That's why I built these stands for my bar clamps. As you can see in the drawing below, the lower part of the stand has an oversized slot that holds the bar clamp upright. The top portion of the stand has a mating slot. This piece is sized to support the workpiece at the level of the clamp head. Now I can easily get all the parts for the panel aligned before I tighten the clamps.

Karl Luomala
Waukegan, Illinois

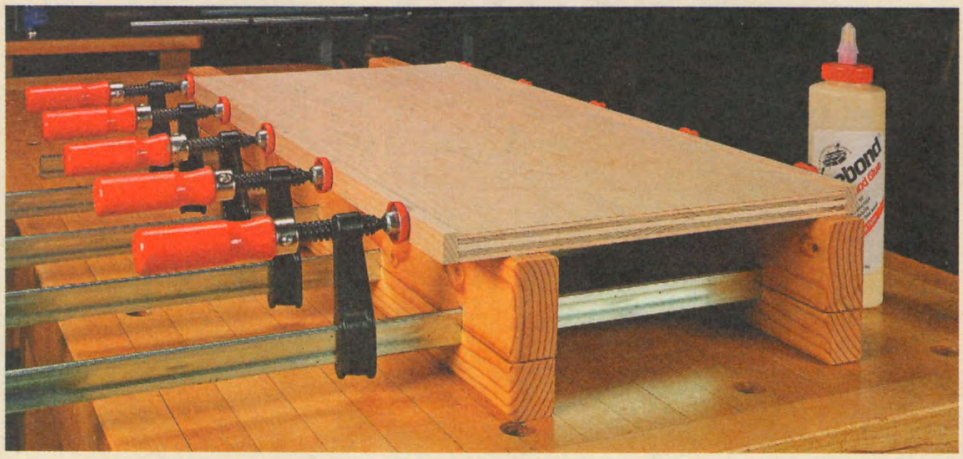

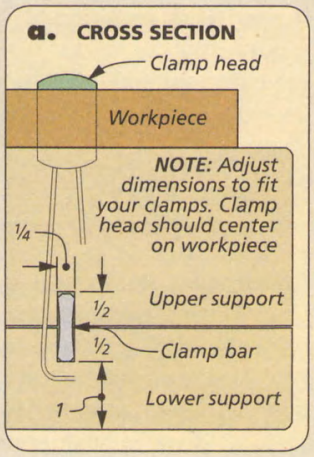

Latch Repair

A number of my tools are stored in molded, plastic containers. The tool fits nicely, but the latches don't always last as long as the container. After several years of opening and closing, these latches can break.

An easy replacement is an oven safety latch, like the one you see at right. They can be found in the baby aisle of most discount stores. They adjust to fit any tool box, too.

Peter Maczik, Jr.
Freeland, Michigan

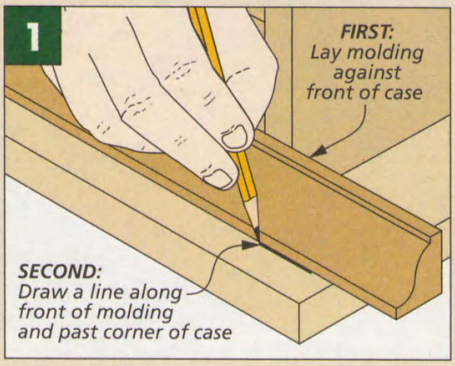

Miter Layout

The easiest way I know to lay out miter cuts on molding for a case is shown in the drawings on the left and below. All that's needed are straight marks on the case.

Even if the case is just slightly out of square, you'll still get mitered corners that line up perfectly. All you need to lay out and mark the molding is a pencil.

Robert Shillis
Easton, Pennsylvania

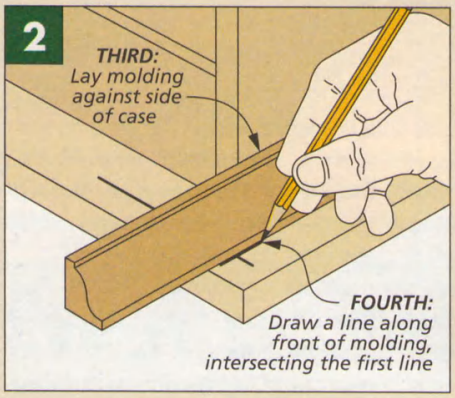

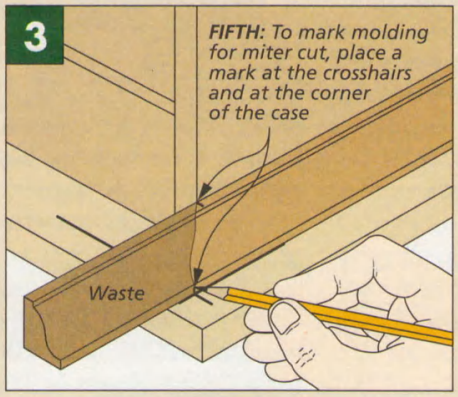

Win This Bosch *Impactor* Driver

That's right, send us your favorite shop tips. If your tip or technique is selected as the featured reader's tip, you'll win a *Bosch* impact driver just like the one shown here. To submit your tip or technique, just go online to *woodsmith.com* and click on the link, "SUBMIT A TIP." You can submit your tip and upload your photos for consideration.

The Winner!

Congratulations to Karl Luomala, winner of the *Bosch Impactor* driver. To find out how you could win a *Bosch* driver, check out the information on the left.

Quick Tips

SHOP-MADE PLANE SACKS

I have a small collection of hand planes that I store in my garage shop. I wanted to protect them from rust caused by constant outdoor weather changes. But I found silicone-treated plane sacks to be out of my price range for the number that I needed for my planes.

I realized that the plane sacks were made from the same material as shotgun sacks. I purchased two sacks from my local firearms store, cut them to length, and stitched one end. I was able to make six plane sacks from two shotgun sacks.

Adam Petersen
Sioux Falls, South Dakota

CHALKBOARD IN THE SHOP

I needed a place to jot down information or make a quick sketch in the shop. Paper is good for this, but it tends to get lost or buried among tools and lumber.

I wanted something to write on that I could find easily and quickly. A chalkboard was the answer. (You can find them at toy and art supply stores.) I attached it to the wall of my shop with screws. Now I can see my sketches and notes from anywhere in the shop.

John Wolf
St. Joseph, Michigan

SELF-ADHESIVE PATTERNS

When it comes time to transfer or cut out a pattern for a project, I don't waste time with double-sided tape or messy spray adhesives. I reach for a couple of products found in the fabric store: fusible web and tear-away stabilizer cloth.

Both the web and stabilizer cloth can be used in an inkjet printer to copy patterns directly to the sticky cloth. Or you can trace or draw on the cloth. And the best advantage to this cloth is it leaves no residue.

David Bishop
Greenville, South Carolina

choosing and using Super Glues

Cyanoacrylate is the perfect solution for many shop projects and woodworking challenges.

Among the many modern adhesives available to woodworkers, cyanoacrylate stands alone in its wide range of applications. Often called "super" glue, cyanoacrylate can tackle some woodworking chores that other, more conventional adhesives simply can't touch.

WHAT IS IT? Cyanoacrylate is very different from the PVA glues used for most woodworking projects. In fact, chemically it's closer to an automotive body filler (like *Bondo*) than any woodworking glue. It's categorized as an acrylic resin. But unlike most two-part resin glues, it doesn't need a separate hardener. Instead, water acts as the hardener. It requires moisture to set up properly. But it also has a few other properties that make it an indispensable glue for woodworkers.

QUICK ADHESION. Cyanoacrylate bonds almost instantly, so it's perfect for quick repairs or situations where it would be awkward to apply clamps. Unfortunately, this means it's also tenacious if you get it on your fingers. (See the box at the bottom of the opposite page.)

BONDS DIFFERENT MATERIALS. Another nice thing about cyanoacrylate is its ability to bond a wide range of materials, like the pewter insert and the wooden box in the main photo. This can be especially useful for inlay work, allowing you to use exotic materials like shell and stone as inlay material.

It's also helpful for making jigs in the shop, attaching wood and plastic (like *Plexiglas*) with a reliably strong bond. If you run into a situation where the glue doesn't seem to be sticking, you can add moisture by exhaling on one surface, like you would if you were cleaning your glasses.

DIFFERENT VISCOSITIES. With thin, medium, and thick formulations available from most manufacturers, cyanoacrylate is easily the most versatile glue on the market. The thin formula flows almost like water.

Cyanoacrylate (CA) is sold under a variety of names and is available in different viscosities. ▼

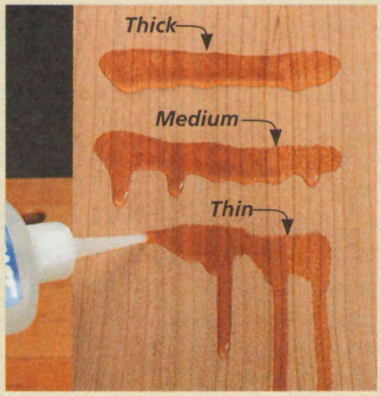

▲ With thick, medium, and thin viscosities, there's a perfect glue for every application.

Its wicking action is a great help for filling in small cracks. Once inside, it seals the crack quickly and permanently. The medium and thick viscosities of glue are more suitable for larger repairs and inlays.

SHEARING STRENGTH. Another unique property of cyanoacrylate is its relatively low shear strength (force parallel to the joint line). This can be used to good effect, however, when you need a temporary bond. While it's nearly impossible to pull apart two glued surfaces, you can tap one of the pieces from the side and crack the bond.

This characteristic means it's perfect for positioning hardware while you lay out and drill screw holes. It also makes cyanoacrylate useful in woodturning. For example, you can attach a small block to a blank to turn a tenon for gripping the blank in a chuck. When you're done, you simply tap the joint from the side to release the bond.

FINISH. You wouldn't consider most glues suitable for use as a finish, but cyanoacrylate actually works very well on small turnings. It provides a hard, glossy finish with plenty of protection for the wood. It's especially useful on woods that are too oily to take a conventional finish. You can see this in the photo at right.

REPAIR WORK. The uses for cyanoacrylate I've cited so far easily earn it a place in the shop. But when you learn to do small repairs by mixing it with sanding dust, you'll have a great way to save a workpiece that might have otherwise ended up in the scrap pile. All you need to do is scoop up some of the dust and you can make a repair in minutes (photos below). For the highest-quality results, I usually sand a piece of matching scrap to collect the fine dust to mix in with the glue.

With so many useful applications, I consider cyanoacrylate a must-have item in the shop.

◄ Some hard-to-finish, oily woods, like this bocote, can be treated with a cyanoacrylate finish.

▲ I was cutting an inlay channel and the saw blade jumped and scarred the workpiece.

▲ With the channel masked off, mix some glue and sanding dust into the cut.

▲ After scraping and sanding the area, the repair is both solid and barely noticeable.

Must Haves: De-Bonders & Accelerators

In addition to a few different types of cyanoacrylate, there are two accompanying products you'll want to keep on hand. The first is a de-bonder. Although you can sometimes clean up cyanoacrylate with acetone, it's never completely effective. A de-bonder dissolves the glue quickly. I'll confess I seldom use a de-bonder on projects. But when you've accidentally glued a finger to a project part, or worse still, to another finger, you'll be glad you have a bottle around.

The other handy product is an accelerator. Like the name implies, a quick misting of a project part makes the cyanoacrylate bond instantly and permanently. You'll want to use some caution, however, since there's no adjusting the pieces afterwards.

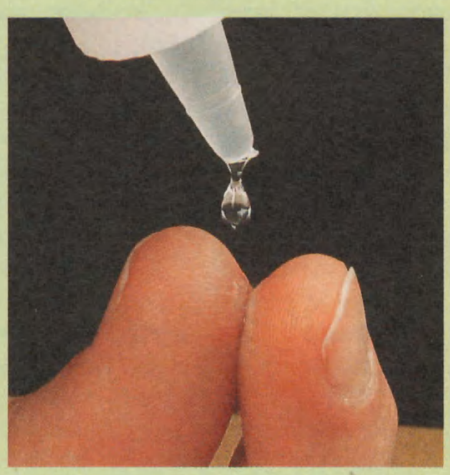

▲ Using a de-bonder to separate glued-together fingers might be its most common application.

▲ Spraying an accelerator on the parts to be joined makes the glue adhere instantly.

a look at

Oscillating Spindle Sanders

A benchtop spindle sander can make many sanding tasks easier. But more importantly, the finished project will also look better.

Most sanders offer an assortment of different diameter drums along with matching inserts. ▼

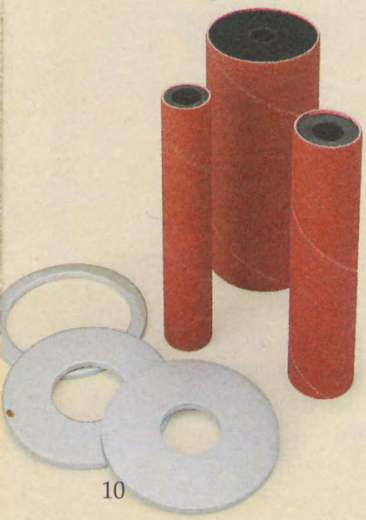

When it comes to sanding curved workpieces, a sanding drum can save you a lot of time and effort. But using a sanding drum in a drill press can present some problems. Even with patience and good technique, it's easy to burn a workpiece and ruin the sandpaper sleeve. The problem is the heat generated by sanding is concentrated on one small section of the drum.

An oscillating spindle sander solves the problem by moving the sanding drum up and down, exposing more of the surface of the drum to the workpiece. The result is a smoother edge on your workpiece, free of burn marks.

Oscillating spindle sanders have been in use in production shops for years. But these industrial floor units were too large and expensive for most small shops. A number of newer benchtop sanders, however, are both affordable and effective. Your choice of an oscillating spindle sander will probably come down to price and features.

POWER. The first thing you'll notice as you look at benchtop spindle sanders is that they don't offer tons of horsepower. But the fact is, they don't really need it. Many good machines are found in the ¼ - ½ hp range. And that's plenty of power for the task.

By moving the spindle up and down as it rotates, an oscillating spindle sander is much less likely to burn the edge of a workpiece

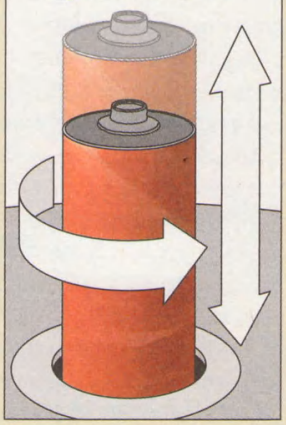

TABLE TOP. Like most power tools, a solid, flat top is critical for getting good results. That's why several models feature cast iron tops. One way to keep the prices down is to use cast aluminum instead. Either one is suitable.

I think the size is a bigger factor. A 16" top is about as small as I feel comfortable with. This allows me to sand large workpieces without fear of them tipping as I work.

DRUMS. The drum is the workhorse of the oscillating spindle sander. Basically, it's a rubber-lined, steel cylinder that fits over the spindle of the sander. Tightening a nut on the end of the spindle compresses the drum and causes it to expand slightly, holding the sanding sleeve in place.

Typically, sanding drums for benchtop sanders range in diameter from ½" up to 3". The drums are easily removeable from the spindle, so you can quickly swap one sleeve for another depending on the radius of the curve you're sanding. Some sanders have twist-lock drums, while others require a tool to make the change.

Along with each size of drum is a corresponding insert, which fills in the gap between the drum and edge of the opening tabletop.

ON-BOARD STORAGE. With so many drums, sleeves, and insert plates, it's handy to have a place on the machine to store them. This helps keep the clutter off your bench.

▲ On-board storage for drums and inserts is a handy feature found on some sanders.

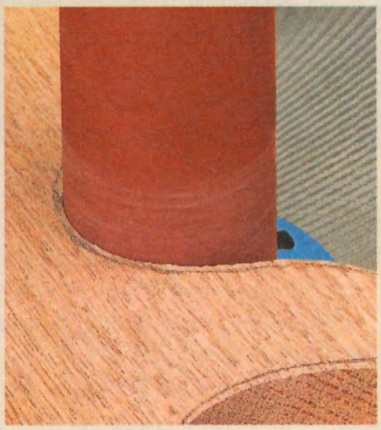

▲ A spindle sander allows you to sand right up to a line, even on tight curves.

▲ A dust collection port keeps the fine dust out of your lungs and off the floor of your shop.

DUST COLLECTION. You'll be making lots of dust with a spindle sander, so dust collection is a must. Most models feature a small port that allows you to connect the sander to a shop vacuum (photo above).

TECHNIQUE. The toughest thing to get used to with these sanders is how aggressive they can be. The key is to keep the workpiece moving along your line. You want to avoid pushing the workpiece into the drum. Instead, take light passes along the length of the workpiece. Stopping can result in sanding past a line or making scalloped marks in an edge. It's a good idea to practice sanding to a line on some scrap before working on a project.

Sanding curves doesn't have to be a chore. Once you've gotten used to using an oscillating spindle sander, you'll wonder how you ever got along without one. W

Worth a Look: Ridgid Oscillating Spindle/Belt Sander

A spindle sander can be a handy addition to your shop. But imagine how useful it would be if you also incorporated an oscillating belt sander into the same tool. That's just what *Ridgid* did with their combination benchtop sander. And with a $200 price tag, this is a tough act to follow.

As you can see in the photos at right, the unit also has plenty of on-board storage in addition to a sizeable worksurface. Weighing in at 40 lbs., it's light enough to move around as needed, but still solid enough to run without much vibration. However, the greatest feature is the ease of changing between the spindle and the belt sander. Everything is easily accessible and the change can be done in a few seconds — no tools required. All in all, this combination oscillating spindle and belt sander is perfect for just about any small shop.

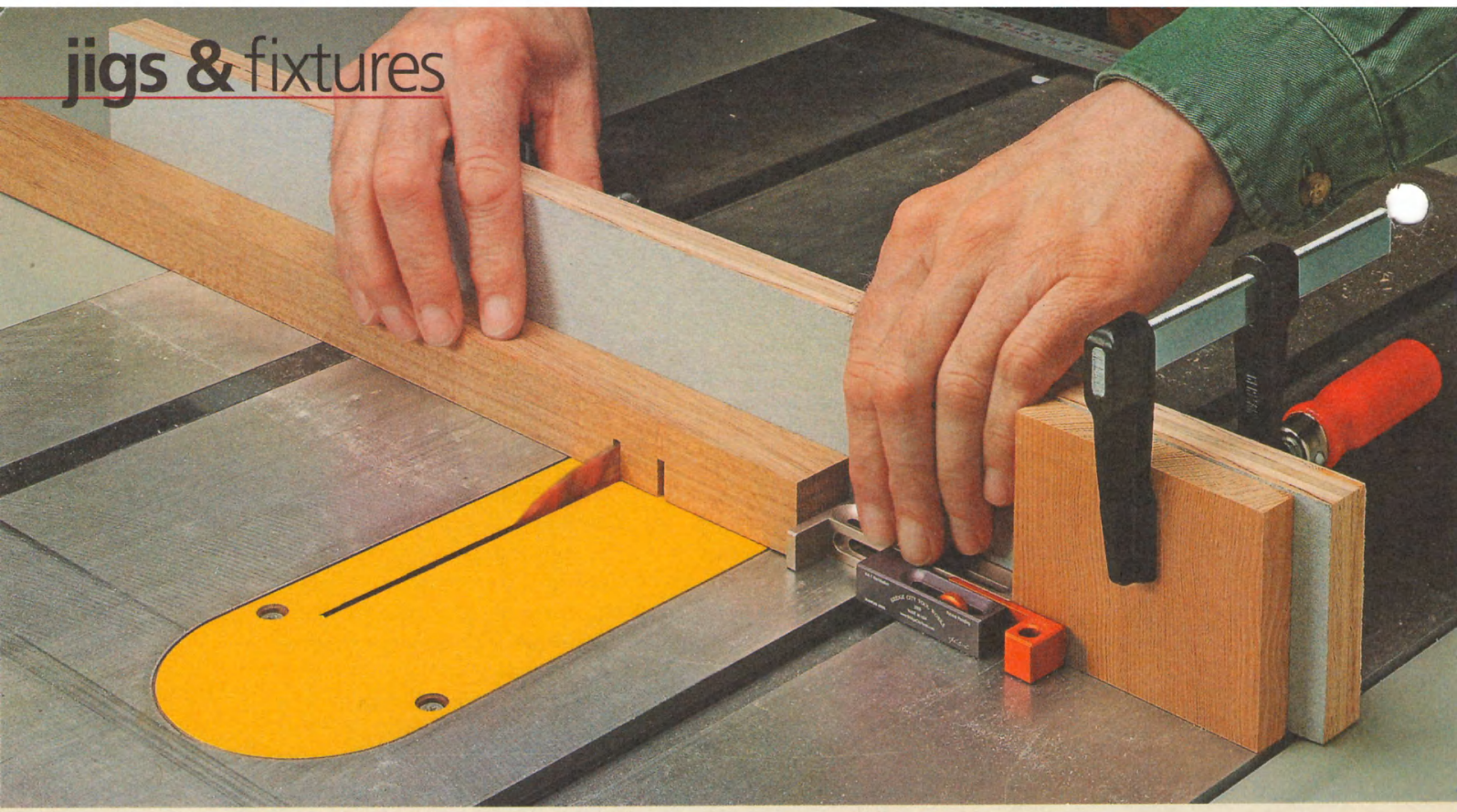

Bridge City Tool Works
KM-1 Kerfmaker

With help from this simple device, you'll be cutting perfect-fitting dadoes, grooves, and half laps with ease.

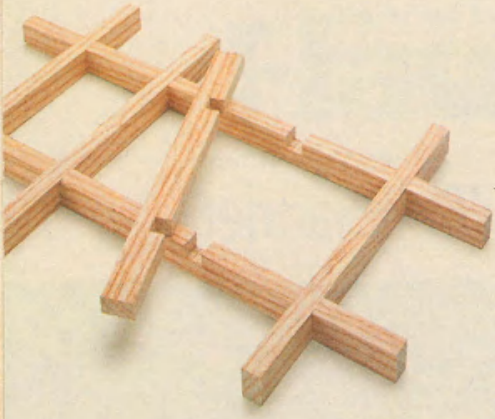

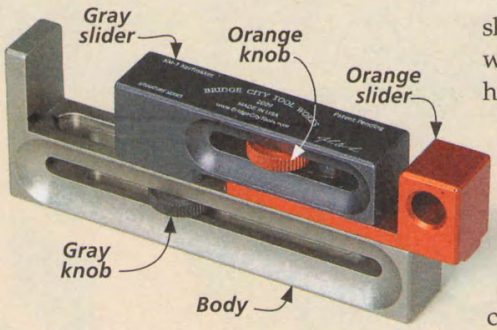

▲ The *KM-1 Kerfmaker* is machined out of anodized aluminum.

Every so often, a new tool comes along that seems so useful, and yet so simple, you have to wonder why no one thought of it sooner. The *KM-1 Kerfmaker*, by *Bridge City Tool Works*, is just such a product.

In a nutshell, the *KM-1* allows you to quickly cut precision notches or dadoes — without the hassle of measuring or shimming a stack dado blade to the exact width. It's especially useful for making half-lap joints, like the ones you see in the upper photo at left.

At first glance, the *KM-1* looks like little more than an adjustable stop block. But actually, it's two stop blocks in one. If you take a look at the photo at left, you'll see what I mean. The *KM-1* consists of a body and a pair of "sliders." The body serves as a fixed-length stop. The sliders are adjusted to establish the width of your notch, dado, or groove.

The combined positions of the body and the sliders allow you to cut both shoulders of your joint. You simply flip the *KM-1* over in between cuts. Then, you just make additional cuts to remove the waste in between the shoulders.

SLIDERS. Now, the first thing you may be wondering is why there's a need for *two* sliders. The reason is simple. The orange slider is adjusted inward from the end of the body to match the width of the kerf cut by your saw blade or router bit. Then both sliders are locked together and adjusted outward to match the thickness of the mating workpiece.

Taken together, the two settings of the sliders create an offset at the end of the body that is equal to the thickness of your workpiece, minus the width of your kerf. This offset is what allows you to establish both shoulders of your notch.

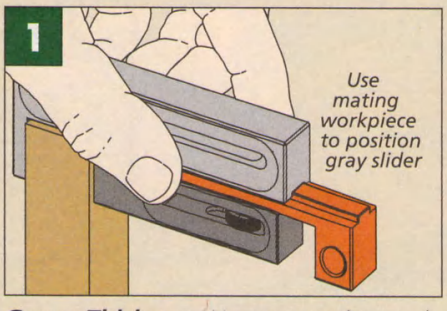

Gauge Thickness. *Use your mating workpiece to gauge the opening between the gray slider and the base of the KM-1.*

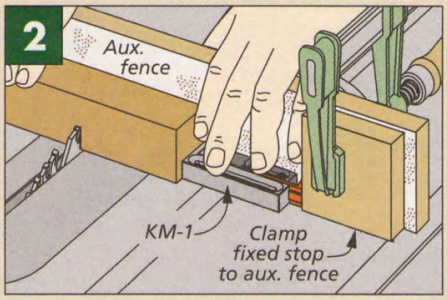

First Cut. *With a stop block clamped to an auxiliary fence, use the KM-1 to position the workpiece for the first shoulder cut.*

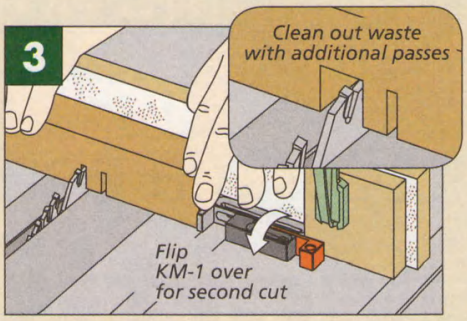

Second Cut. *To cut the second shoulder, simply flip the KM-1 over and slide your workpiece down a little.*

CALIBRATION. Before using the *KM-1* for the first time, you'll need to "calibrate" it to the width of the kerf cut by your blade or bit. This is simply a matter of adjusting the orange slider in relation to the end of the body. Tightening the orange knob then locks the two sliders together. This step only needs to be performed once, unless you change the blade or bit.

The directions supplied with the *KM-1* show a couple of different ways to make this adjustment — one using a dial caliper and one that doesn't require any measuring tools at all. (The *Bridge City Tool Works* website includes a video that shows both methods.)

GAUGE THE THICKNESS. After calibrating the *KM-1* for the kerf width, you then set it to match the width (or thickness) of the mating workpiece (Figure 1). There's no measuring involved here. And since you're using the actual workpiece to set the *KM-1*, you're practically guaranteed a perfect fit.

USING THE KM-1. Once both sliders are locked in place, you're ready to cut the shoulders of your joint. To do this, clamp a stop block to an auxiliary fence on your miter gauge so that the *KM-1* positions your workpiece for the first shoulder cut (Figure 2).

To cut the second shoulder, simply flip the *KM-1* over and slide the workpiece down (Figure 3). Then you can make additional cuts to remove the remaining waste.

In addition to notches and dadoes, the *KM-1* can also be used to cut grooves, as shown below.

FINAL IMPRESSIONS. I'll admit that when I first saw the *KM-1 Kerfmaker*, I was a little skeptical that it could live up to its $72 price tag. But the fact that I was cutting perfect half laps right out of the gate made a believer out of me. If you do a lot of precision work involving half laps, notches, or dadoes, the *KM-1* is definitely worth the investment. W

Shop Tip: Fine-Tuning

The *KM-1* will give you incredibly tight-fitting joints — sometimes too tight. If this is the case, you can loosen the fit by using a paper shim when setting the jaws to match the thickness of your mating workpiece.

How-To: Cut a Groove With the KM-1

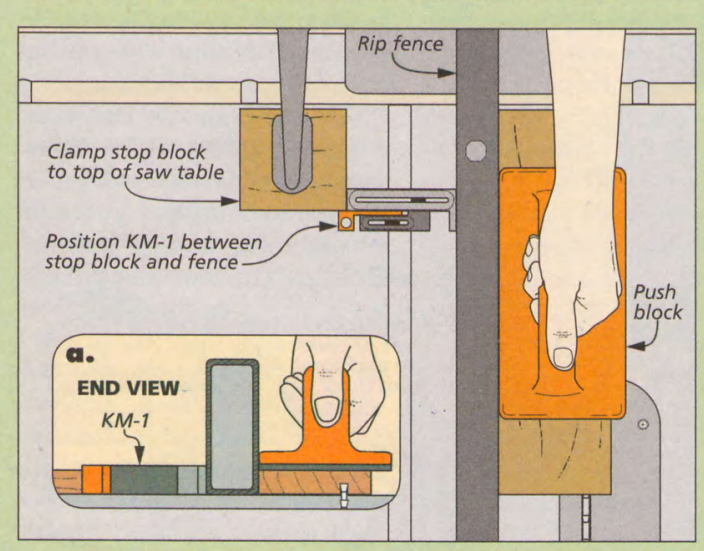

First Shoulder. *Position the rip fence to cut the first shoulder of the groove. Then clamp a stop block to the top of your saw (or the rail of your rip fence), with the KM-1 sandwiched in between.*

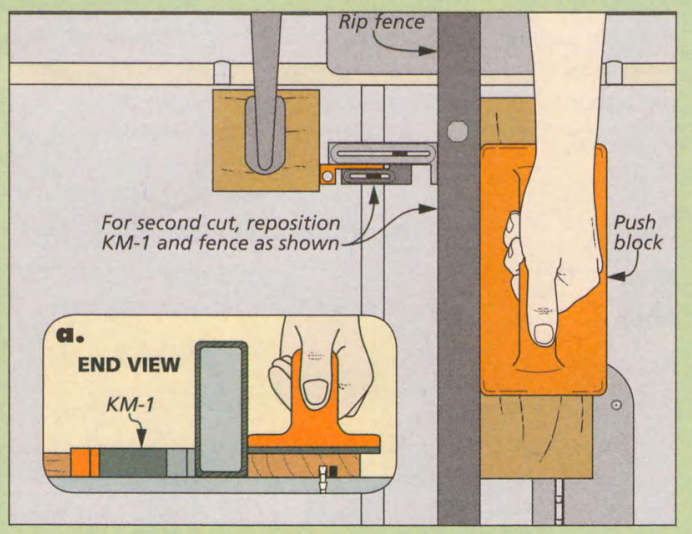

Second Shoulder. *To cut the second shoulder of the groove, leave the stop block clamped in place. Then, simply flip the KM-1 over and use it to reposition your rip fence.*

cutting a perfect Mortise

An easy-to-master, three-step technique and simple tools are all it takes to consistently produce accurate mortises.

▲ A combination square and a utility knife are the only tools needed to lay out a mortise.

The mortise and tenon is probably the most used and trusted joint in traditional woodworking. For me, making the two parts of the joint always follows a specific order — the mortise comes first, followed by a tenon to fit. Once the mortise is completed, the table saw or the router table will quickly give you an accurate tenon. But I've found that the best method of cutting a clean, square, accurately sized mortise is to combine a little modern machine woodworking with some old-fashioned handwork.

THREE STEPS. My "blended" technique for cutting mortises involves a common, three-step routine. First, I lay out the mortise at the bench. Next, I take the part to the drill press to drill out the bulk of the waste. Finally, it's back to the bench to square and clean up the mortise. The trick to making the process flow smoothly and produce a top-notch mortise is the way you approach each step.

FIRST, THE LAYOUT. When laying out the mortise, there are two goals. The first is accuracy. You need to make sure the mortise is sized and positioned correctly. The second requirement is a distinct layout line that's easy to read during the following two steps.

My solution is shown in the drawings below. I use a combination square and a sharp knife as a layout gauge. The square provides the accuracy while the crisp lines incised by the knife create a precise guide for placement of your chisel when cleaning up the mortise.

First, I lay out and mark the two ends of the mortise. Use the blade of the square to measure and use the knife to mark a nick at each end point. Then strike a sharp line across each end (Figure 1).

To mark the cheeks of a centered mortise, use the rule markings on the blade of the square to set it to the thickness of the mortise sides. Next, I position this "gauge" along each face of the workpiece, make a short cut, and measure between them. If necessary, readjust the blade to size the width of the mortise correctly. When you get it right, mark both sides by sliding the square along the edge of the workpiece with the tip of the knife tight to the blade, as in Figure 2.

SECOND, DRILL PRESS. With the layout of the mortise completed, the drill press is your next stop. Here, you're going to remove most of the waste from the mortise by drilling a series of overlapping holes.

THREE TIPS. Figure 3 shows how the drill press is set up for the task. To keep the drill bit on target and the holes aligned, I trap the workpiece between two fences. The workpiece can slide along the fences but can't move front-to-back.

I like to use a Forstner bit or brad-point bit with a diameter slightly smaller than the width of the mortise — for example, a 3/16"-dia. bit for a 1/4"-wide mortise (Figure 3b).

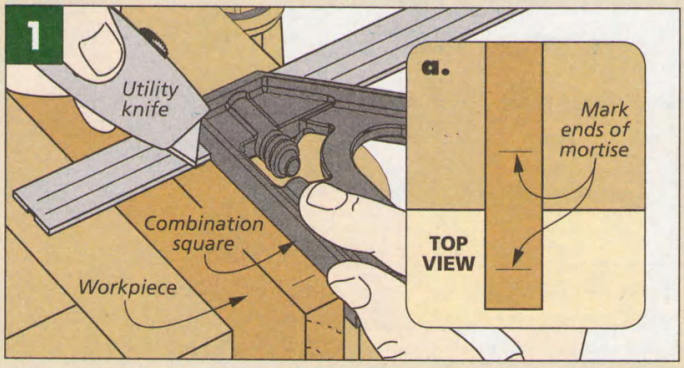

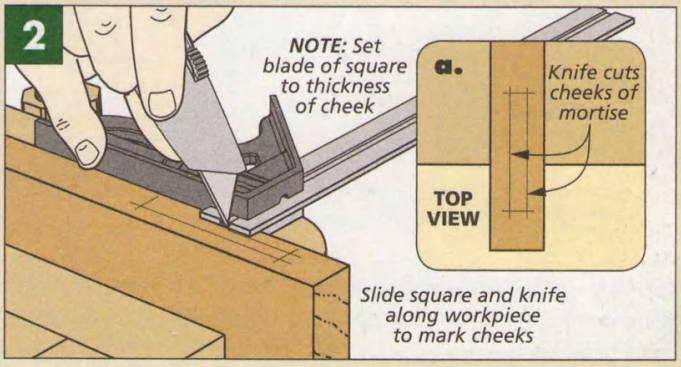

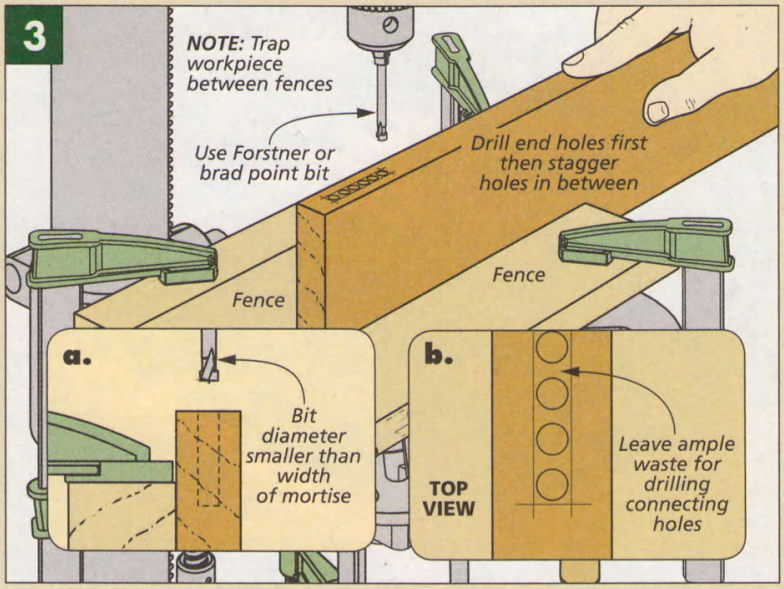

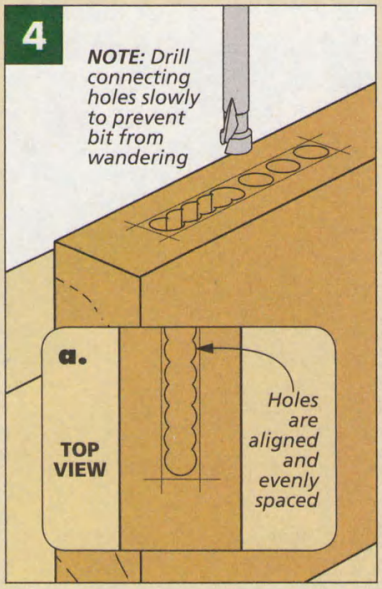

You won't have to worry about centering the bit perfectly and you'll avoid ending up with "corrugated" sides if the bit wanders slightly.

You'll want to set the depth stop on the drill press to about 1/16" deeper than the length of the tenons. This makes fitting the tenons and the final assembly a lot easier.

It works best to drill the holes in a set pattern, as in Figures 3 and 4. Start with a hole at each end as close as comfortable to the layout line. Next, drill staggered holes between the end holes, leaving space between them to provide a solid footing for the drill bit. Finally, drill the connecting holes slowly to keep the bit from wandering.

SQUARE UP THE MORTISE. Now it's back to the bench to square up the mortise. For this, I use two sharp chisels and a mallet. You'll need a wide chisel to pare the cheeks of the mortise and a narrow chisel to clean the ends (main photo).

With the workpiece clamped firmly, I begin by establishing the perimeter of the mortise with a series of shallow cuts. Place the wide chisel in the knife line defining the cheek and tap lightly. Work from end to end along both sides. Switch to the narrow chisel and repeat this effort across the ends (Figure 5). Next, I use an angled cut to loosen and lift a small chip from each end, as in detail 'b' below.

With this short shoulder established, you can make slightly more aggressive cuts at the ends of the mortise without trying to remove the waste. Then switch chisels and cut deeper along both of the cheeks. The waste will begin to chip from the mortise cheeks.

Continue to alternately pare the sides and the ends. This back and forth pattern will provide clearance for the chisels as you work deeper into the mortise. And you'll have a better shot at keeping the cuts perpendicular to the edge.

When you reach the bottom, you can use the narrow chisel bevel side down to remove the waste from the corners. You'll have to angle the chisel into the mortise from both directions to get clear into the ends, as shown in Figure 6.

Finally, be sure the mortise is clean and free of chips and then double-check the depth with a rule or combination square. If everything checks out, you're done. The mortise is ready for a tenon. W

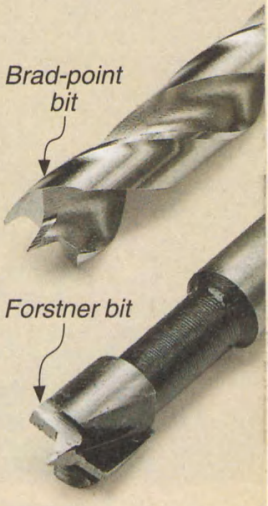

▲ A brad-point or Forstner bit allows you to drill out the mortise cleanly and accurately.

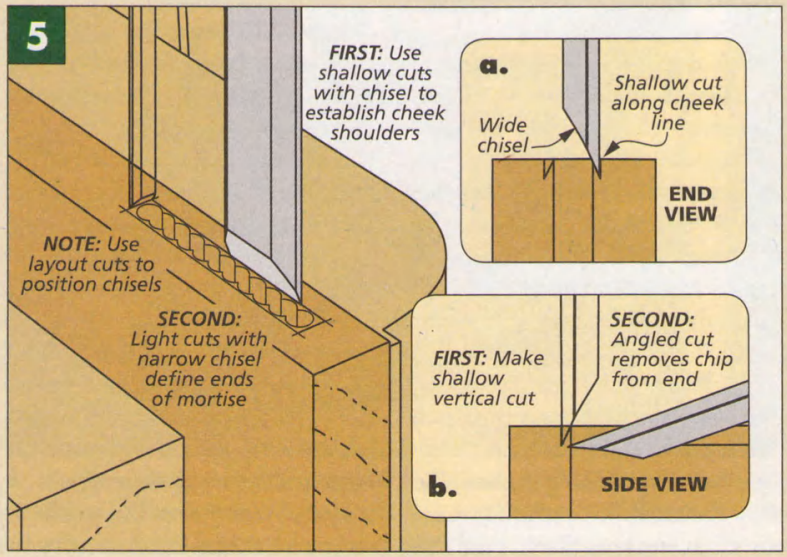

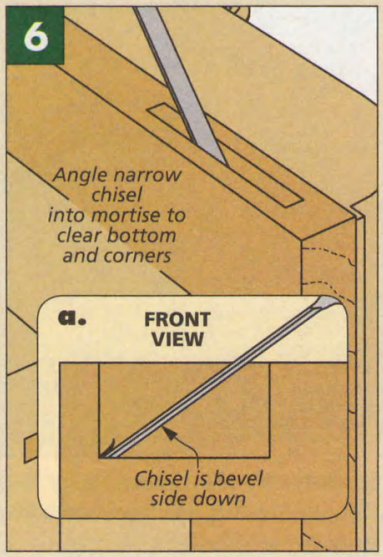

woven-lid Potpourri Box

Contrasting woods and an interesting, woven panel make this box an impressive table accent. And you won't spend a lot of time on the construction.

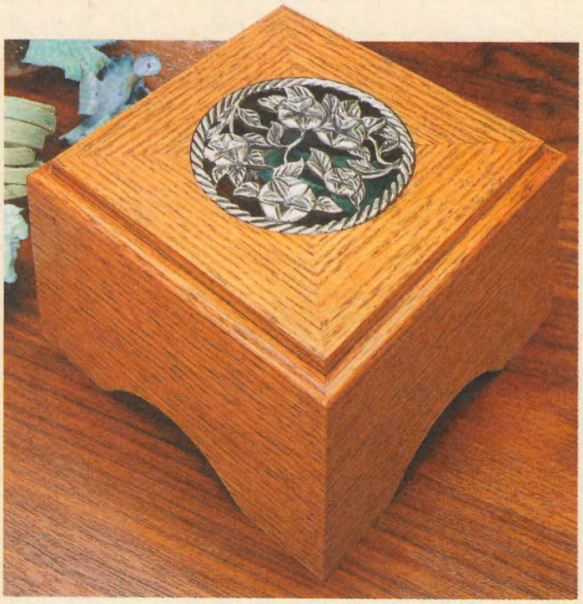

Woodsmith GO ONLINE EXTRAS

To find plans for an alternative pewter lid design, visit our website at Woodsmith.com.

Building a small project is a great way to polish your woodworking skills. Especially when the project has something as unique as a lid with a woven panel.

But don't let the newness of this feature stump you. It's just a few strips of veneer that are easy to weave. Or you may opt for the alternative lid with the pewter insert (left photo). It's an equal challenge. Either way, after you've made the box and lid, you can enjoy the aroma of the potpourri.

BUILD THE MITERED BOX

This project is made up of two main assemblies: a box and a lid. You'll start by making the box. The four identical sides of the box are cut from one long blank. I did this so that it's easier to form the two rabbets on the inside of the box. These rabbets hold the lid and a nylon screen bottom.

RABBETS. To begin the box, I cut a ¾"-thick blank to width. The How-To box on the opposite page shows you how to cut the two rabbets for the lid and screen. A dado blade is a good way to cut the narrow rabbet along one edge of the blank. This rabbet holds the drop-in lid you'll add later.

I cut the wide rabbet for the screen in two passes, using a single saw blade. First, I made a shoulder cut at the bottom of the rabbet and then flipped the workpiece on edge and cut away the waste.

Once you have the rabbets cut, you can cut the four sides to

final length. This prepares them for the miters you'll cut next.

MITERS. There are a number of different ways to cut miters, and getting a perfect fit can be a challenge. You'll find some tips and techniques on page 42. There's also a tip in the right margin.

SLOTS. To keep the miters aligned and strengthen the joints, I routed slots for the splines (detail 'b'). There's a simple technique for routing accurate slots in Shop Notebook on page 28.

CUTOUTS. After you've finished the slots, make the decorative cutouts in the sides of the box. These cutouts also allow air circulation under the box, which disperses the aroma of the potpourri. To make the cutouts, I first marked the arc on each side with a compass (detail 'c'). Then use a band saw to cut the arcs and smooth the edges with a sanding drum.

SPLINES. When you've completed the sides of the box, you can turn your attention to the splines. There's more information on cutting the splines on page 29.

TEST FIT. Before you add any glue, you'll want to dry-assemble the box with the splines in place. If the splines are a little too thick for the slots, sand them down with a piece of adhesive sandpaper attached to a flat, solid surface. (Your table saw is a good choice.) The glue will cause the splines to swell slightly, so you want to leave a little wiggle room in the slots.

ASSEMBLY. After you've determined that everything fits and the box is square, go ahead and glue up the sides. I used a band clamp to hold them. Once the glue is dry, trim the splines with a chisel.

ROUNDOVER. The next step for the box is to rout a roundover on the top outside edge. I did this after the box was assembled so the corners matched perfectly.

SCREEN. To hold the potpourri, but still allow air to flow through, I glued a piece of screen into the lower rabbet. I used cyanocrylate (super glue) to hold it in place.

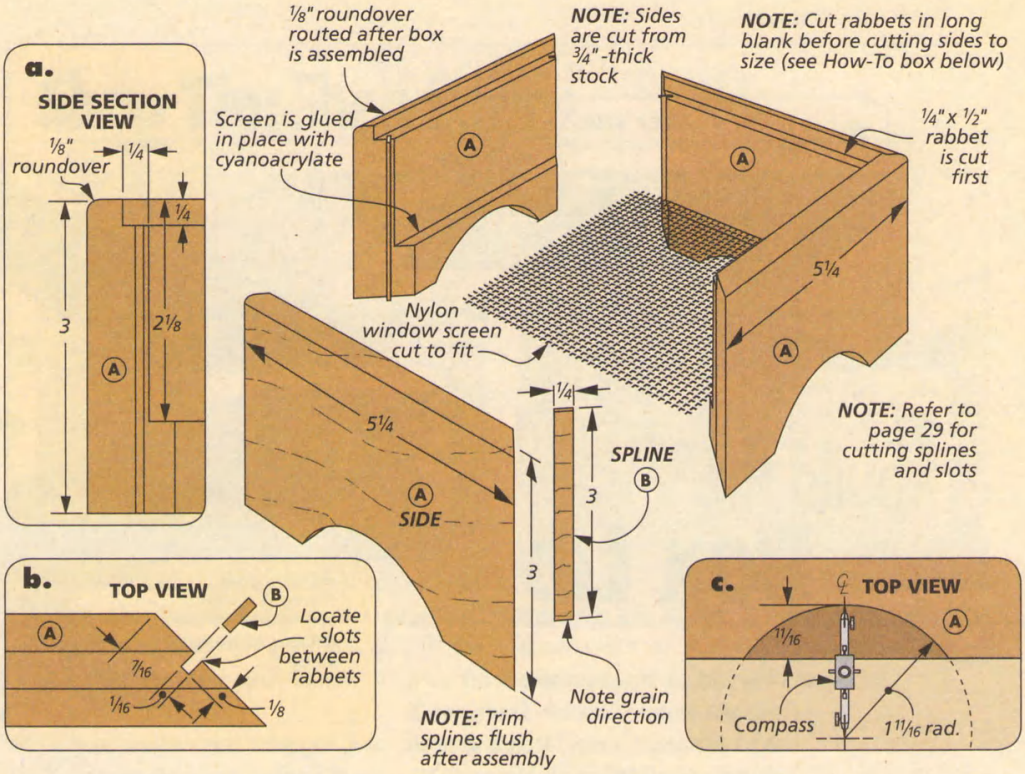

Shop Tip: Spacer

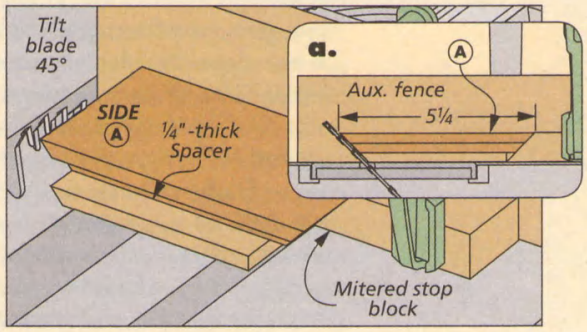

Support the Cut. *Cut the miters with the inside face down. Use a thin spacer under the workpiece to support it during the cut.*

How-To: Cutting Rabbets

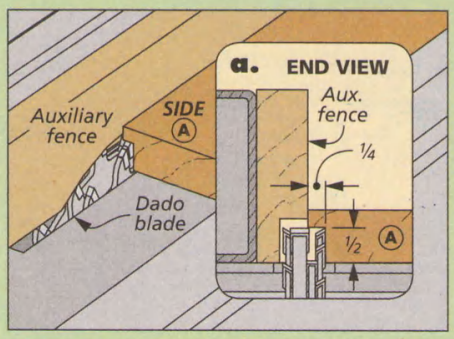

Lid Rabbet. *The first rabbet is cut on the top edge of the blank. This rabbet holds the box lid and sets up the next cut.*

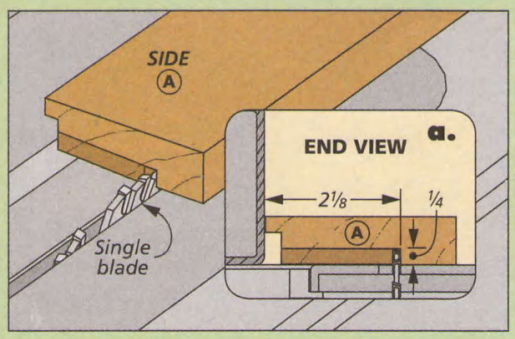

Shoulder Cut. *Make a shoulder cut on the inside of the box blank for the screen rabbet. A single blade can be used.*

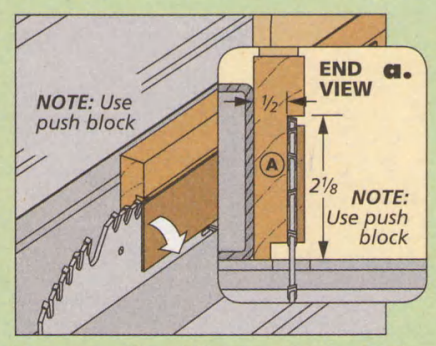

Remove the Waste. *Raise the saw blade to the shoulder cut and remove the waste from the rabbet.*

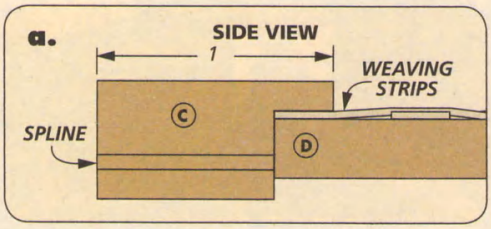

build the BOX LID

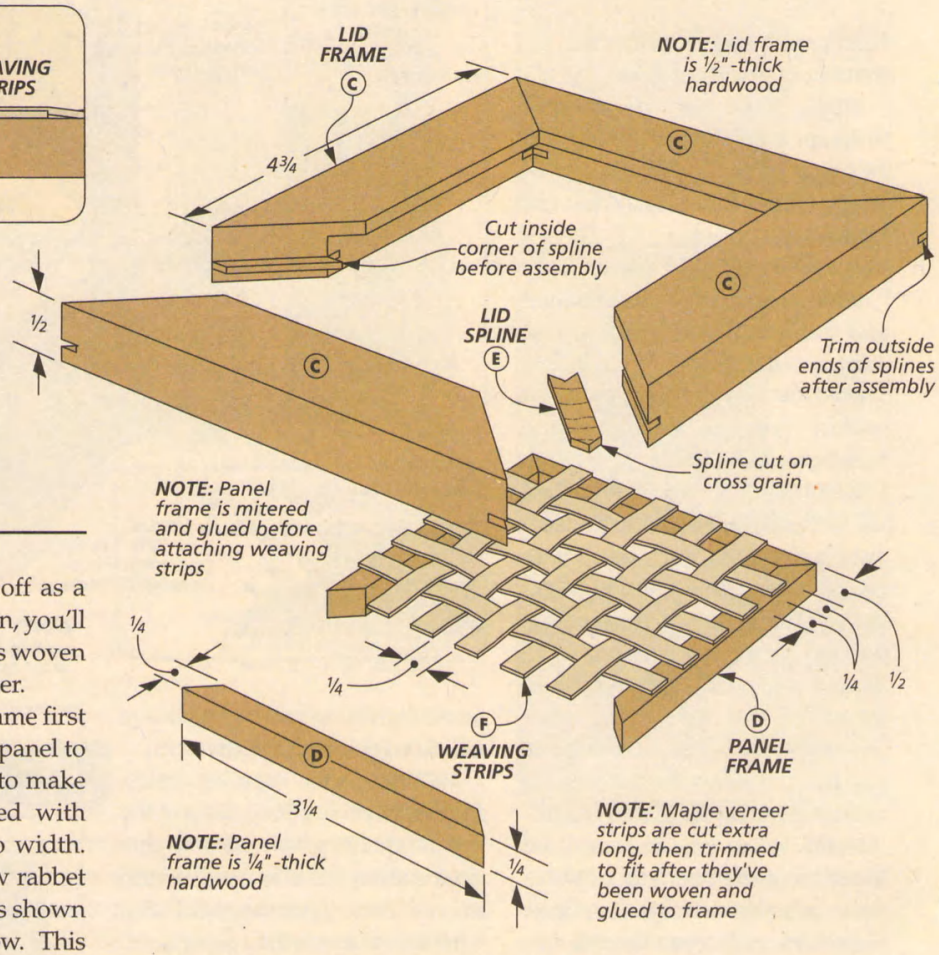

The lid of the box starts off as a simple, mitered frame. Then, you'll add a center "panel" that is woven from several strips of veneer.

LID FRAME. I built the lid frame first and then sized the woven panel to fit in the opening. Again, to make the frame pieces, I started with an extra-long blank cut to width. Then you can cut a narrow rabbet on the edge of the blank, as shown in the How-To box below. This rabbet will hold the panel.

MITERS. After the rabbet is routed, you're ready to miter the pieces to length. By now, you're familiar with this task. So when all the pieces are cut to size, you can tape them together and test the fit of the lid in the box.

SLOTS. Once the miters were cut, I took the workpieces over to the router table to rout the slots for the splines. Again, I used a slot cutter in the router table to do this. The setup is shown in the center drawing in the How-To box below. Just be certain that you orient each workpiece with the top face down. I used a beveled backer board to guide the workpiece.

ASSEMBLY. The splines for the lid are made the same as the splines for the box. But before you glue them in place, you'll want to cut the inside corners, as shown in

How-To: Rabbets & Splines

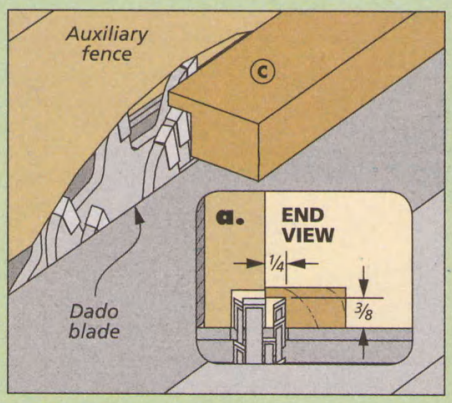

Rabbet. *The rabbet for the inner frame, is cut on the table saw using a dado blade buried in an auxiliary fence.*

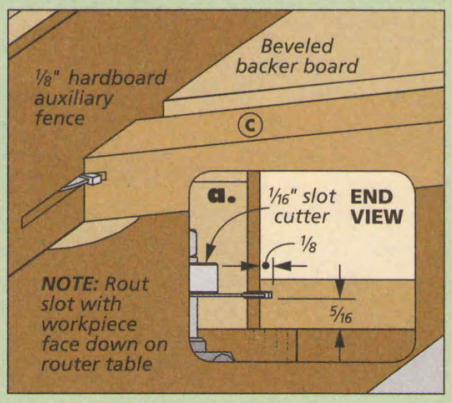

Slots. *Cut the slots for the splines in the lid with a slot cutter. An auxiliary fence on the router table will set the depth.*

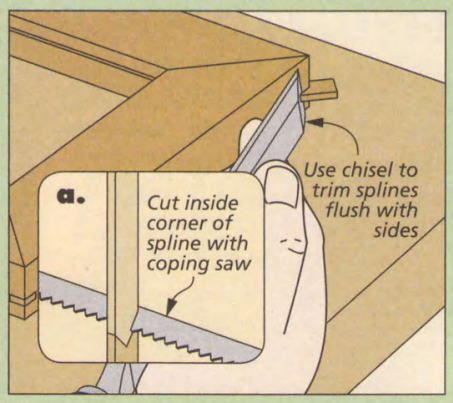

Trim Splines. *Trim the inside corners of the splines before assembly to avoid marring the panel frame after assembly.*

the detail 'a' of the last drawing in the box on the opposite page. I used a band clamp again to hold everything in place. When the glue is dry, you can trim the outside of the splines.

PANEL

The center panel of the lid is made up of woven strips of veneer glued to a frame. I made the panel frame first so I could size it to fit inside the rabbeted opening in the lid.

PANEL FRAME. The panel frame is cut from a narrow, extra-long blank. You can miter the individual pieces to length on the table saw using the sled shown in the article on page 45. I cut them to fit in the lid. When the panel pieces are complete, you can glue the corners to assemble a frame. Once the panel frame is assembled, you can set it aside while you cut the veneer strips for the woven panel.

WEAVING STRIPS. To create the woven panel, I used extra-long strips of veneer. I've found the best way to cut veneer is with a utility knife and a straightedge, but there are a couple things to consider before you start.

You'll need to use the utility knife with the blade fully extended. And the straightedge should be at least ½" thick so that you can press the side of the knife blade against it. If you take a look at the top drawing on the right, you'll see what I mean. The thin blade of a utility knife has a tendency to follow the grain. For this reason I use several light passes to slice the veneer so it doesn't split. You can increase the pressure with each pass to make an even cut.

WEAVING. Veneer is very pliable so weaving the thin strips will be easy. Each of the strips will bend several times during the weaving process, which is why I cut the strips extra long. This way the extra length will accommodate the bend in the weave.

To begin the weaving just glue half the strips vertically to one side of the frame and weave the remaining strips horizontally into the vertical strips. You can see the step-by-step process in the How-To box on the right.

After the strips are glued in place, you can trim the excess with a utility knife. I used the edge of the frame to hold the point of the knife steady. A little sanding will smooth any excess left on the ends.

The completed panel is glued into the rabbet in the lid. To hold everything together while the glue sets up, I cut a clamping block to fit into the center opening in the bottom of the lid frame, as shown in the lower drawing.

FINISH. After staining and finishing the box (refer to Sources on page 51), you'll want to find a central place to display it so the potpourri scent fills the room. W

Materials, Supplies & Cutting Diagram

A	Sides (4)	¾ x 3 - 5¼
B	Splines (4)	1/16 x 3 (rgh.) - ¼
C	Lid Frame (4)	½ x 1 - 4¾
D	Panel Frame (4)	¼ x ¼ - 3¼
E	Lid Splines (4)	1/16 x 1½ (rgh.) - ¼
F	Weaving Strips (10)	¼ x 3½ (rgh.)

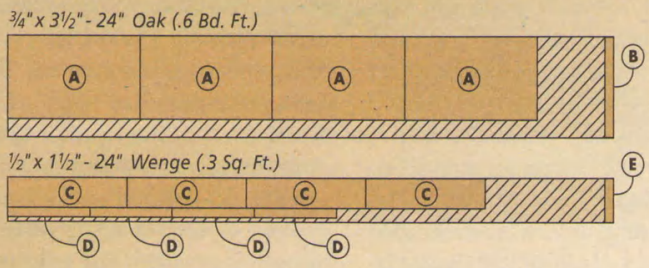

Also Needed: 5"x 5" sheet of maple veneer

How-To: Weaving

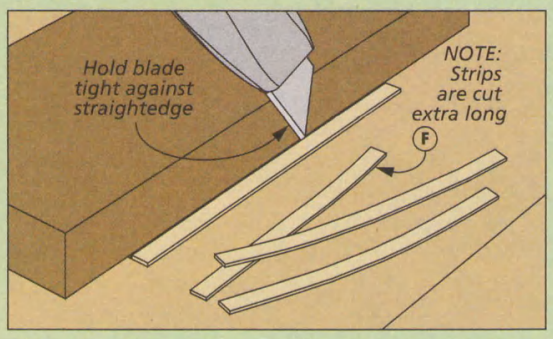

Slice the Veneer. *Veneer will cut easily with several passes. Hold the blade against the straightedge to keep the tip from wandering with the grain.*

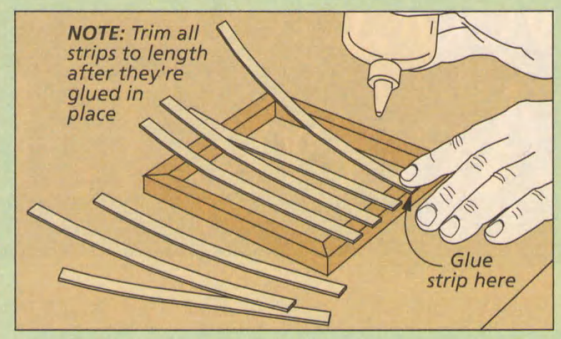

Vertical Strips. *Start the weaving process by gluing five strips to one side of the panel frame. If you use cyanoacrylate glue, the joint will hold instantly.*

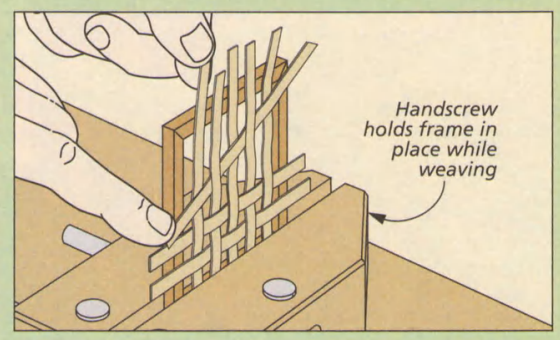

Horizontal Strips. *The remaining five strips are woven into the vertical strips and then glued in place. Trim the ends after they're glued.*

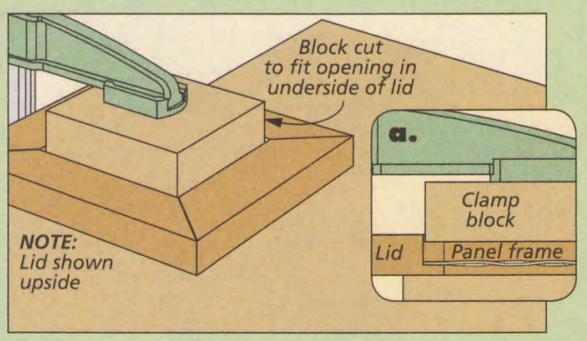

Glue Up. *After the weaving is complete, glue the panel in place. A clamping block cut to fit the opening will ensure equal pressure on all sides.*

veneered Accent Table

The beautifully veneered top and shelf, as well as the tasteful details, combine to give this small table a very big impact.

At its simplest, building a small table involves nothing more than joining four legs to apron rails and then adding a top. But as you can clearly see in the photos above and at left, the construction of this attractive accent table is anything but a run-of-the-mill job.

The mortise and tenon frame of the table is really pretty standard — four tapered legs and a "beaded" apron. Making and adding the pattern veneered top and shelf is where the interesting and fun challenge lies.

The top and shelf also add a slight twist to the construction. The shelf is captured in notches in the legs during the frame assembly. This means that the shelf has to be completed and fit before the frame can be glued up. The upshot is that I approached the work in reverse order — making the veneered top and shelf first, then building the frame and assembling it around the finished shelf.

GETTING STARTED. The top and shelf start out as panels of ½" MDF. Then both are veneered with the same "reverse-diamond" pattern — four squares of walnut veneer with the grain oriented to run diagonally toward the center of the panel (photo above). The more elaborate top gets additional layers of black banding and mahogany crossbanding.

PANELS. So the first task is to cut oversized panels from ½" MDF for the top and shelf. The extra size simply provides a little "fudge

factor" when laying the veneer. My top panel was 16" square and my shelf panel 13" square.

The key is to make sure the panels are as square as possible. The shape of the panel is your guide for orienting the veneer pattern, so starting out with perfectly square panels will make laying the veneer easier and the end result better.

GUIDE LINES. With the panels cut to size, I took them to the bench to lay out a series of guide lines, as shown in the box below. These will be used to position the veneer. First, I marked a pair of diagonals on each panel. Then I drew "crosshair" lines that precisely divided the panels into equal squares.

PATTERN PIECES. Now you can turn your attention to assembling the main veneer patterns. You'll start by cutting squares of veneer, as shown in the photo below.

My sheet of paper-backed veneer was 24" wide by 96" long. This large size allowed me to select pieces for the best figure match. To help lay out the top and shelf pieces on the veneer, I used two oversized template squares made from ¼" hardboard.

Simply position the template in a likely spot and mark around it. (Remember, the grain should run diagonally across the square.) When you have four squares that make a good match, reposition the template and carefully cut out each one using a utility knife.

CONSTRUCTION DETAILS

OVERALL DIMENSIONS: 14½"D x 14½"W x 26"H

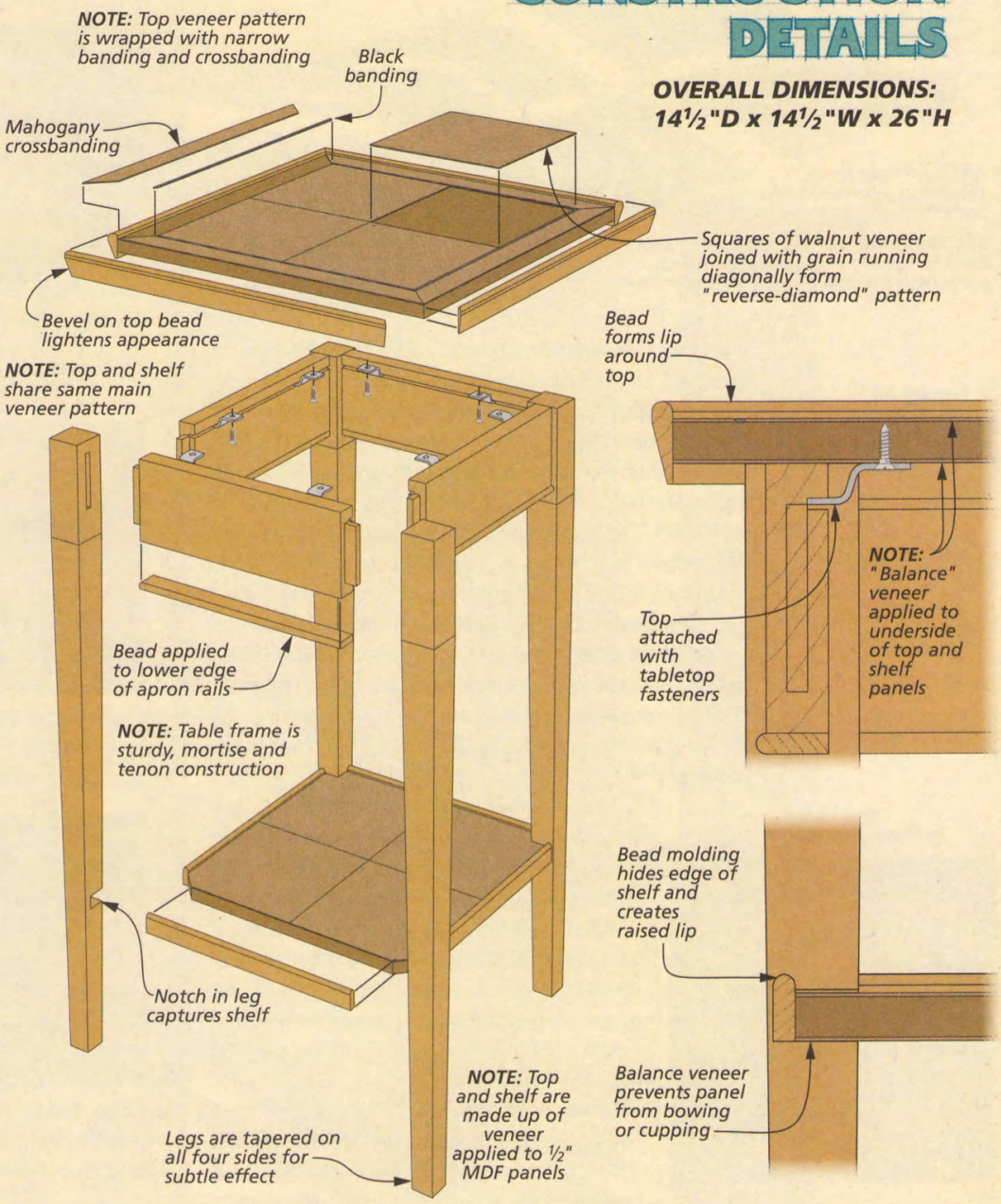

How-To: Begin Assembling the Pattern

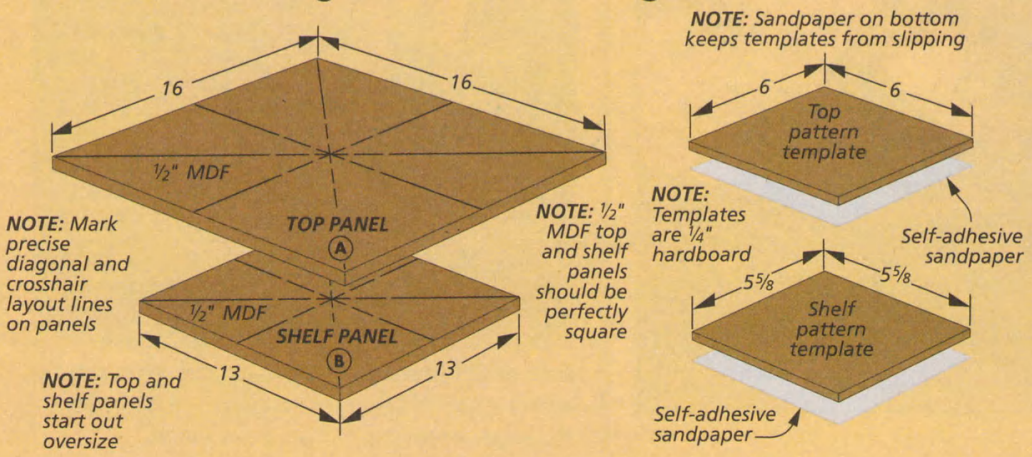

▲ The easiest way to lay out and cut the veneer squares that make up the pattern is to use a utility knife and a hardboard template.

REVERSE-DIAMOND PATTERN

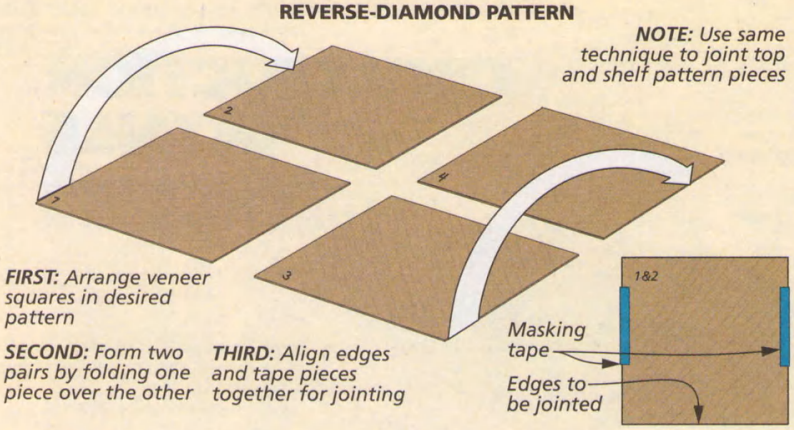

With four, well-matched pieces cut for both the top and the shelf, the next step is to joint the edges and tape them together to form the reverse-diamond pattern. Then, the assembled pattern is glued to the MDF panel and trimmed to final size. The banding and crossbanding on the top are added after the pattern is laid.

THE STEPS. The sequence of photos at right show how the pattern is joined up. This is done in two stages — first jointing and taping the pieces into two halves and then assembling the halves into the full square.

JOINTING THE EDGES. After laying out the squares in the desired arrangement, I formed them into two pairs by folding one piece on top of the other, as shown in the drawing above. Then I aligned the edges to be jointed and taped the pieces together, as shown.

TOP PANEL
(Pattern trimmed to size)

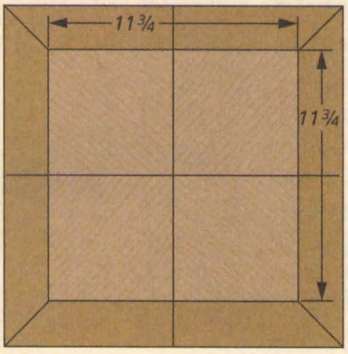

I jointed the edges using a simple jig and a flush-trim bit in the router table. The jig holds a veneer pair while providing a perfectly straight edge for the bit to follow.

After taping the seams with veneer tape, you can fold the two halves together and clamp them in the jig to joint the two long edges. Repeat the taping sequence with the two halves to complete the pattern, making sure the seams line up.

LAYING THE PATTERN. The next task is to glue the assembled pattern to the MDF panel. The goal is to lay it perfectly flat and square to the reference lines on the panel.

The bottom photo shows my gluing setup. I made a thick caul from two layers of ¾" MDF, gathered up

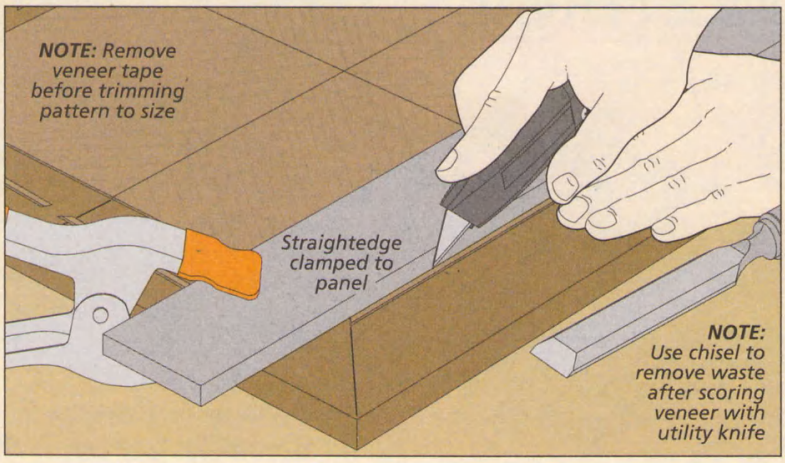

How-To: The Pattern

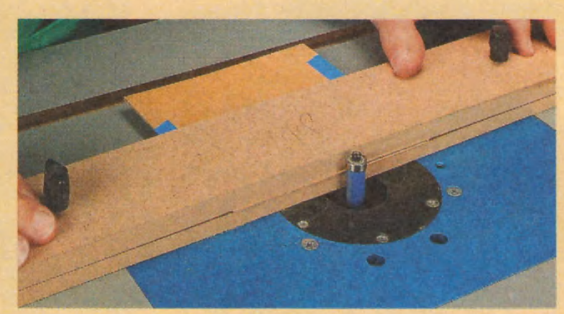

Jointing the Pairs. *Clamp the pair in the trimming jig with the edges to be jointed evenly protruding about 1/16". Then pass it across a flush-trim bit.*

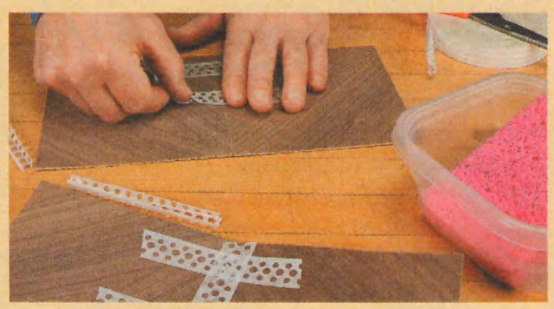

Taping the Seams. *Masking tape applied temporarily to the underside will align the pieces while you apply veneer tape across and along the seam.*

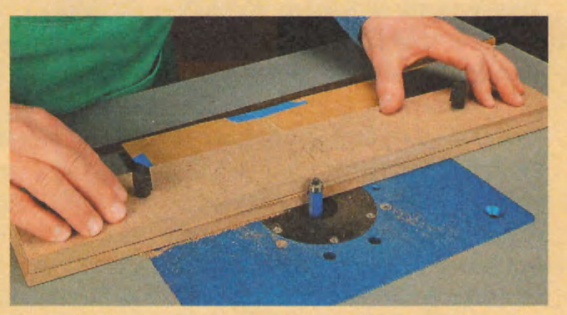

Long Seam. *The two halves can be taped together and jointed in the same way. Then open up the pair and tape them together to complete the pattern.*

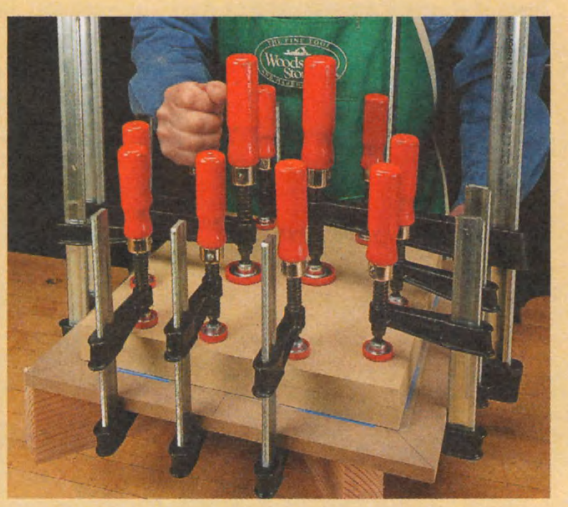

Lots of Clamps. *The keys to a successful glueup are a thick caul and plenty of pressure. Masking tape at the edges keeps the pattern from shifting.*

an armful of clamps (including a couple with deep throats), and set the panel on blocks.

I spread "slow-set" yellow glue (*Titebond Extend*) on the pattern and aligned the seams with the square lines on the panel. Masking tape overlapping the edges slightly will keep the veneer from shifting when the clamps are tightened.

TRIM TO SIZE. After about an hour, I removed the clamps and caul and carefully scraped and sanded off the veneer tape. Then I trimmed the pattern applied to the top to final size (margin on opposite page). I did this by scoring the veneer with a knife (drawing at bottom of opposite page) and then paring away the waste with a chisel. The shelf is trimmed to size on the table saw later.

BLACK BANDING. The ⅛"-wide black banding goes on next. This is a piece-by-piece, hand-fitting and gluing operation. The procedure is shown in the box below.

Start with an extra-long piece and miter one end using a sharp chisel. Apply glue to the underside and then position it on the panel with the mitered cut aligned with the corner. Press it firmly against the center pattern along its length. Continue to run your finger (or a roller) along the banding until the glue tacks up enough to hold it — just a short time.

Now you can miter the long end using the diagonal layout lines as a guide. Then work around the panel, fitting one miter at a time.

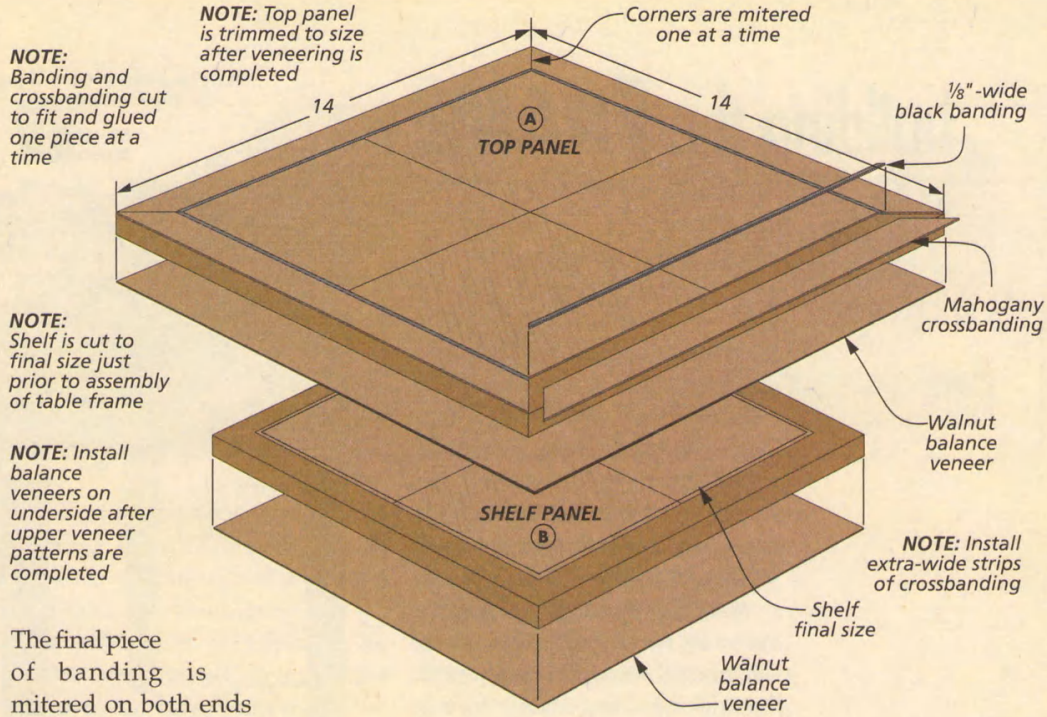

The final piece of banding is mitered on both ends before being glued down.

CROSSBANDING. The wider mahogany crossbanding is added in a similar fashion. Start with 1¼"-wide, extra-long, crossgrain strips of paper-backed veneer. The edge that fits to the banding should be straight and cleanly cut.

I started by mitering one end of one piece. Then I aligned the piece on the panel and applied a masking tape "hinge" along the seam (right drawing below). You can fold the piece back to apply glue, then press it place. Using a roller, I applied pressure until I was sure the glue would hold.

Once the glue was sufficiently dry, I used a wide chisel to miter the second end and remove the excess. Continue working around the panel in the same way.

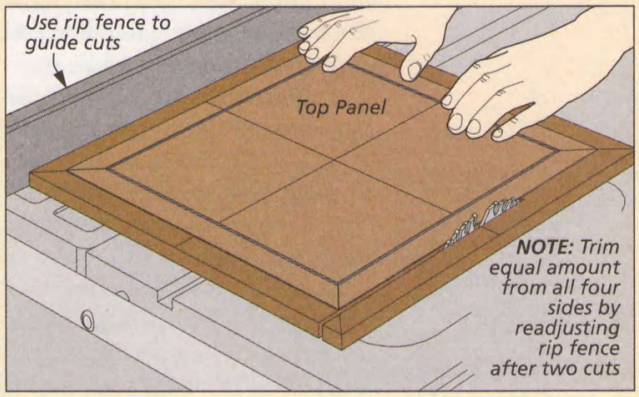

Here again, you'll miter both ends before gluing on the final piece.

BALANCE VENEER. Before trimming the top to size, as shown above, I veneered the underside of both panels. These single-piece veneers prevent the panels from warping by balancing the stresses.

How-To: Apply Banding & Crossbanding

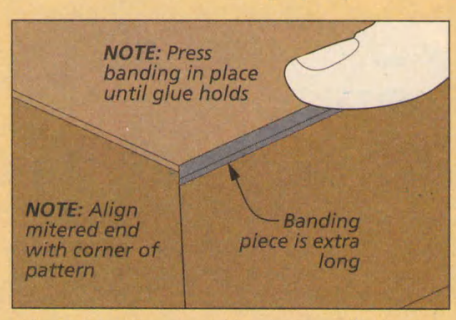

Piece by Piece. *With glue applied, align the mitered end of an extra-long piece and press it in place until it holds.*

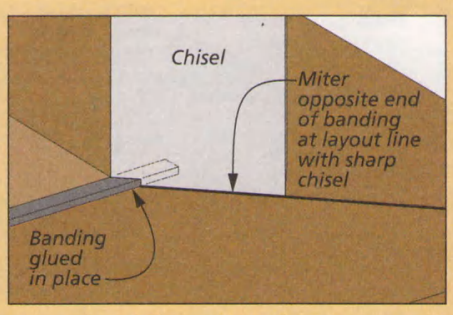

Opposite Miter. *Allow the glue to grab sufficiently before mitering the opposite end to length with a sharp chisel.*

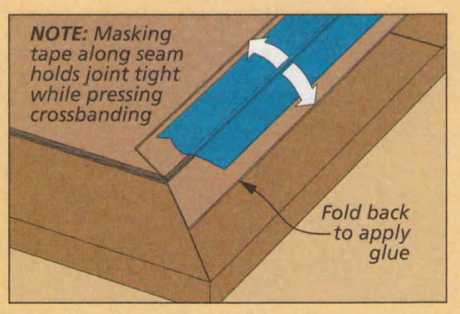

A Hinge. *When installing the crossbanding, I applied a masking tape "hinge" along the seam to help position the veneer.*

building the FRAME

Now that the veneering on the top and shelf is completed, you can begin work on building the basic, mortise-and-tenon table frame. You'll find that this work is much more routine. The only minor challenge involves cutting the notches in the legs to hold the shelf. But keep in mind that the frame can't be assembled until after the veneered shelf is cut to size and fit.

TAPERED LEGS. I started building the frame by making the four, identical tapered legs. You'll find that the trick to doing this is to take each step in the right order. The illustrations below will guide you through the process I used.

The first task is to cut four blanks to the overall size shown in details 'a' and 'c.' Once this is done, take a minute to arrange the blanks for their best appearance and then label them accordingly.

THE MORTISES. Next come the mortises that will hold the apron rail tenons. Each leg needs identical, shallow, mortises on the two inside faces. The technique I used to make the mortises was one very familiar to me — beginning with the layout at the bench, proceeding to the drill press to rough out the waste, and then moving back to the bench for the final cleanup. For more details on the finer points of this technique, take a look at the article on page 14.

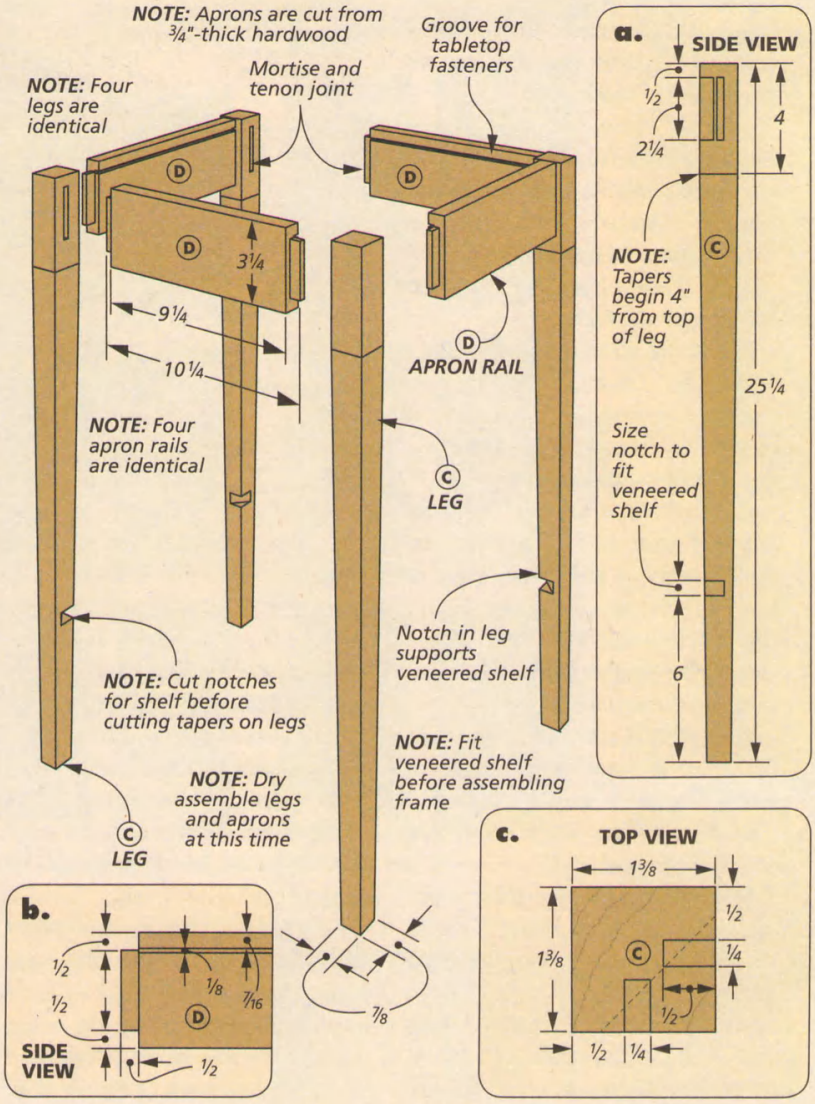

THE NOTCHES. At this point, I had a decision to make. I was worried that cutting the notches for the shelf after the legs were tapered could be a tricky operation. So I chose to do this step next, while the blanks were still square.

The notches are cut across the inside corner of each leg, as shown in the main drawing above.

How-To: Make the Tapered Legs

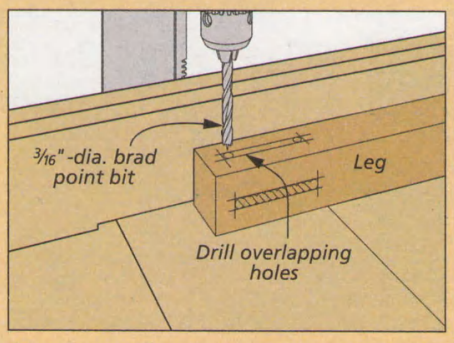

Mortises. *After laying out the mortises on the legs, I drilled out the waste before squaring them up at the bench.*

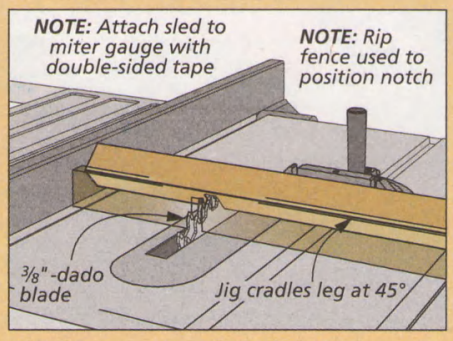

Notches. *I cut accurately sized notches across the corners by supporting the legs in a sled with a V-shaped groove.*

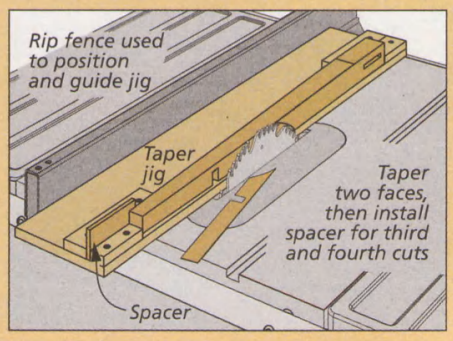

Leg Tapers. *You can use a two-position jig on the table saw to cut consistent tapers on all four sides of the legs.*

(The corners of the shelf will be beveled to fit the notches.) To make these cuts accurately on the table saw, you'll need a way to support the blanks at a 45° angle to the table. My simple solution is shown in the middle drawing at the bottom of the preceding page. I used a miter gauge sled with a V-shaped slot to cradle the leg blank as I passed it over a dado blade.

THE CUTS. The details on making the sled are shown in the box at right. Once it's ready to go, you can set up the saw for the cuts.

The notch should measure ¾" deep (detail 'a' at right). You want to size the width of the notches for a snug fit over the shelf. But if it's too tight, the assembly of the frame might be difficult. The photo below gives you the idea.

I used the rip fence as an end stop to help size the width of the notches. With a ⅜"-wide dado blade in the saw, I first positioned the fence to cut the lower portion of the notch. After making a cut in all four leg blanks, I nudged the fence away from the blade and made a second set of cuts. You can just repeat this routine until the notch is a good fit to the shelf.

THE TAPERS. With the notches completed, the tapers can be cut on the blanks. The legs have a taper cut on all four faces, starting 4" from the top. This four-sided taper creates a more subtle visual effect.

I cut the tapers on the table saw with the help of a tapering jig, as shown in the right drawing at the bottom of the opposite page. But since all four sides of the legs are tapered, I had to make adjustments to the jig and my routine.

The jig, shown in detail on page 28, includes a ¼"-thick spacer. The trick is to make the first two cuts on adjacent faces without the spacer in place. Then I installed the spacer between the stop and leg for the following two cuts. The spacer simply compensates for the waste removed by the initial cuts.

THE RAILS. After sanding the taper cuts, I set the legs aside and turned my attention to making the apron rails. The simple steps involved in this task are illustrated below.

To begin, I cut the four, identical rails to final size from ¾"-thick stock. Now both ends of each rail need a "four-shouldered" tenon sized to fit the mortises in the legs. To accomplish this, I installed a dado blade in the table saw and bury it in an auxiliary rip fence.

First, I cut the long shoulders and cheeks for each tenon using an auxiliary fence on the miter gauge to prevent tearout. You want to sneak up on the thickness of the tenons testing the fit to the mortise.

After the long shoulders are cut, raise the blade to cut the top and bottom shoulders. Here, you'll have to hold the piece on edge.

A SINGLE CUT. When you're satisfied with the fit of the tenons, there's one more detail to take care to complete the rails. The top will be attached to the frame with tabletop fasteners. So each rail needs a groove cut on the upper inside edge, as shown below. The groove is simply a shallow saw kerf.

Shop Tip: Notch Sled

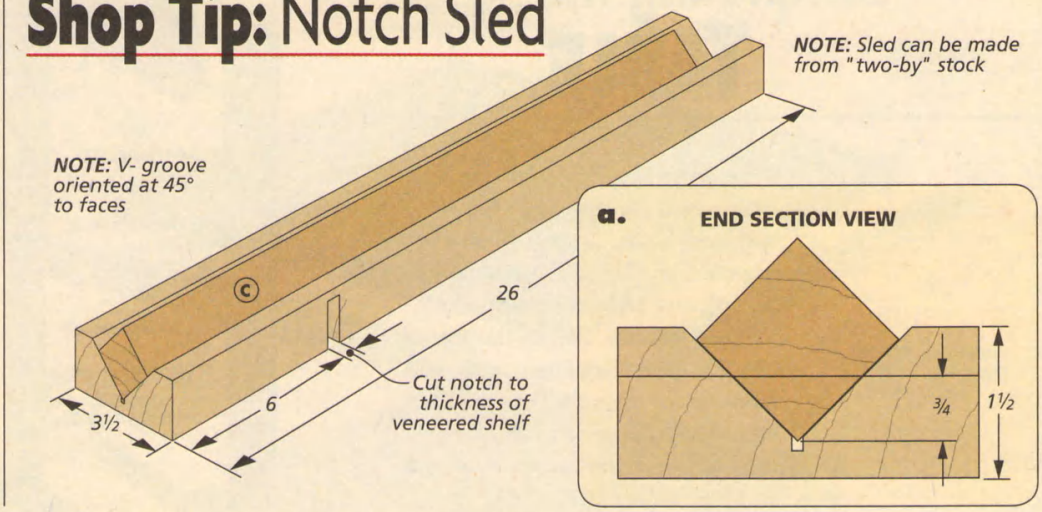

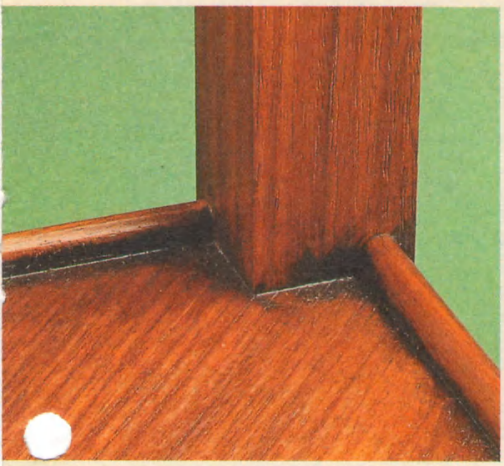

▲ I used the veneered shelf to size the notches in the legs for a snug, but easy, fit.

Make the Apron Rails

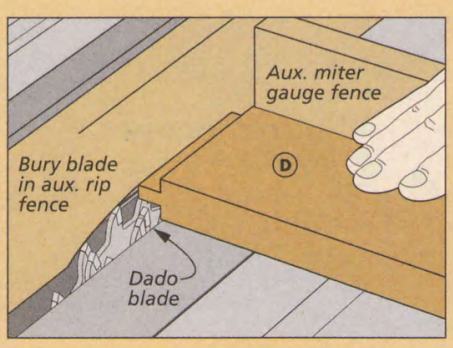

Tenons. *A dado blade buried in an auxiliary rip fence will handle the rail tenons. Sneak up on a good fit to the mortises.*

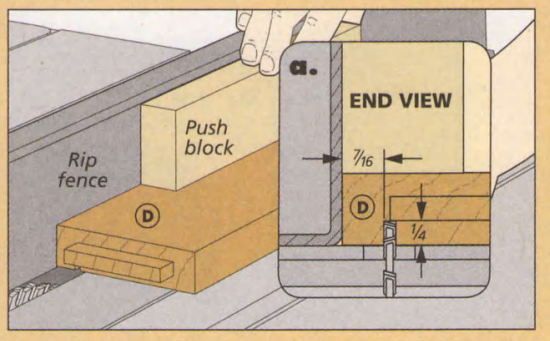

A Single Cut. *All you need to do to accommodate the tabletop fasteners is make a shallow cut along the upper, inside face of the rails.*

completing the TABLE

Wrapping up the construction involves a number of details — assembling the frame, then adding some bead molding, and finally, completing and installing the top.

FITTING THE SHELF. Before the frame can be glued together, you still have to fit the shelf to it. This includes cutting it to final size and then beveling the corners to fit the notches in the legs.

The outer edges of the shelf will later be covered by bead molding, as shown in the main drawing at right. So a perfect fit isn't absolutely essential. But you can eliminate any chance of a fit that's too tight or too loose by using the dry-assembled frame to help size the shelf.

To get the overall size, I clamped up the frame and checked it for square. Then I measured between the outer edges of the notches across a pair of legs. I double-checked this measurement on another pair of legs and then cut shelf to this size. Just like the top, you'll have to cut an equal amount off each edge to keep the veneer pattern centered.

MITERED CORNERS. With the shelf cut to size, you can miter the corners, as shown in the left drawing below. The width of the miter should match the width of the notch (detail 'b'). I clamped a stop block to the miter gauge to ensure all the cuts were consistent.

ASSEMBLY. Before spreading any glue, I performed a "dry run" to make certain the shelf fit properly. A band clamp comes in handy for pulling the legs and shelf together.

When everything checked out, I began the assembly by gluing up two opposite leg and rail assemblies. Then I glued the two remaining rails between the legs and at the same time glued the shelf into the notches in the legs.

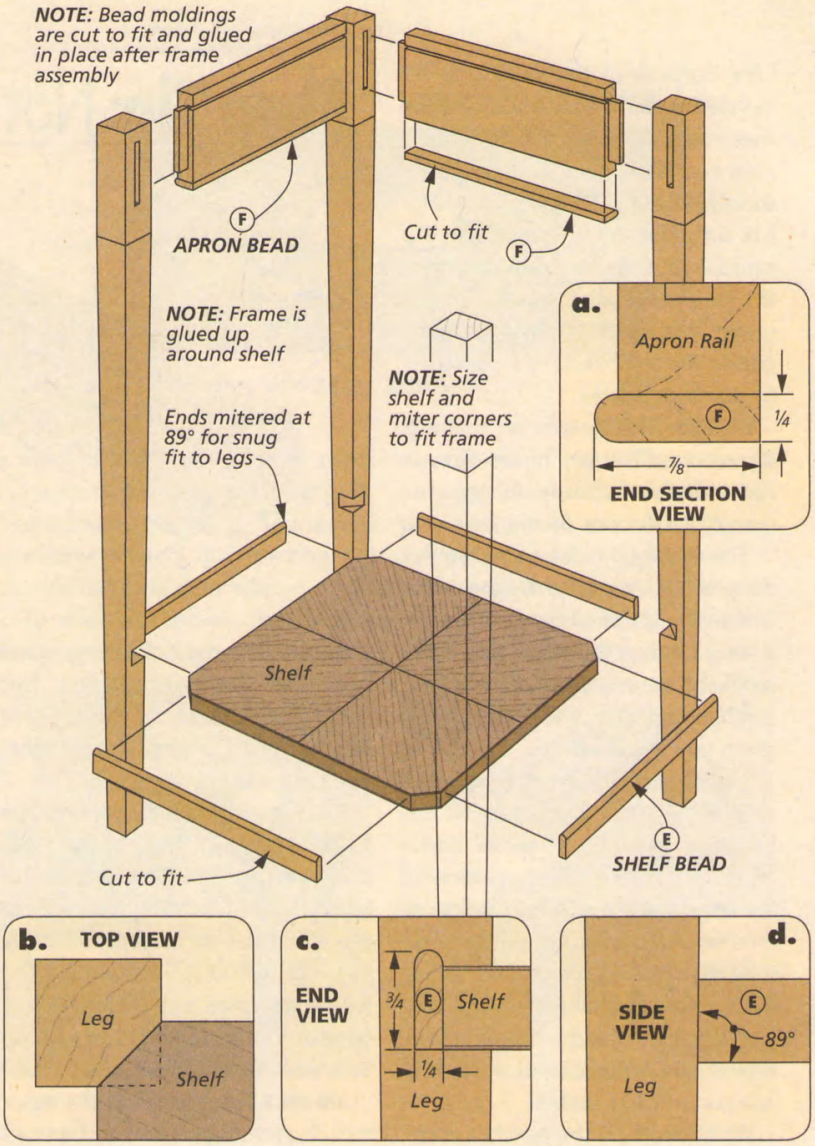

How-To: A Few Details

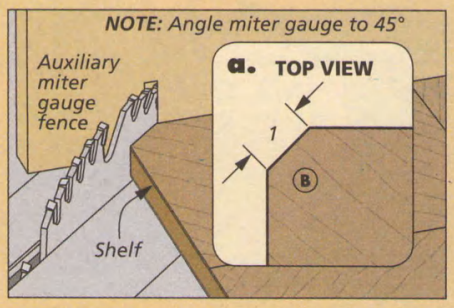

Shelf Corners. *I used an auxiliary fence and stop block on the miter gauge to cut consistent miters on the shelf corners.*

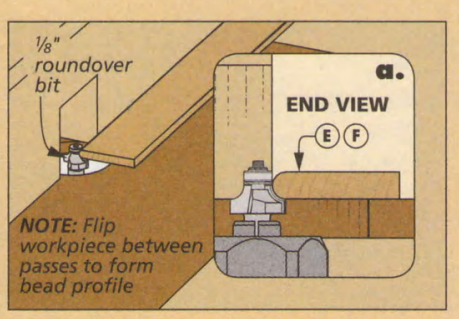

Bead Molding. *To make the shelf and apron bead, rout roundovers on an extra-wide blank, then cut the pieces to width.*

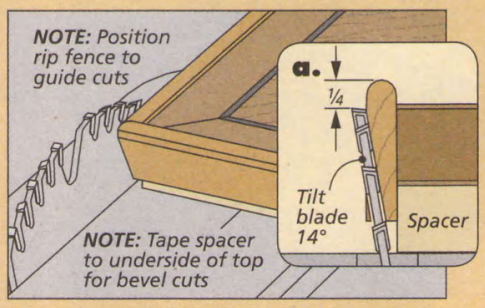

The Bevel. *When beveling the top bead, a spacer raises the top off the saw table to prevent damage to the lower edge.*

BEAD MOLDING. Now you can complete the frame by making and adding some bead molding. As I mentioned, a "raised" bead is used to hide the exposed MDF on the shelf edges. A second bead is added to the lower edges of the apron rails.

The two bead moldings are different widths, but otherwise identical. I made a couple of long pieces of each width and then began fitting and gluing them in place (middle drawing at bottom of opposite page).

Due to the taper of the legs, the bead wrapping the shelf is mitered at an 89° angle. When glued in place, it should be flush with the underside of the shelf (details 'c' and 'd,' opposite). Adding the rail bead is straightforward (detail 'a,' opposite).

FINISH THE TOP. The challenging work on the top is done. But it does require just a bit more attention before it can be installed on the frame.

To complete the top, you need to add some bead molding that covers the edges and forms a raised rim. Another feature of the bead is a bevel on the outside edge, as you can see in detail 'a' above.

BEVELS HOW-TO. To make it easier to install the bead, I decided to cut the bevels after gluing it in place. The profile of the top bead is identical to the rail and shelf bead. It's sized in width to sit proud of both surfaces of the top (detail 'a').

And with the bead in hand, you can miter pieces to fit around the top and glue them on. I used ¼"-thick spacers on the underside of the top to help position the bead while tightening the clamps.

Once the last of the clamps came off, I took the top to the table saw to finish shaping the molding. As you can see above, when the bevel is cut, the lower edge of the bead is reduced to about 1/16" in thickness. So to avoid damage to these thin edges during the cuts, I taped a spacer to the underside of the top to raise it off the saw table (bottom right drawing, opposite page). The same rip fence setting should work to cut all four sides.

ATTACH THE TOP. I waited until after the finish was applied to attach the top. The easiest way to do this is to place it upside down on the bench and center the up-turned frame on it. Now you can position the tabletop fasteners, mark and drill pilot holes, and finally, drive the screws. And the final task, finding the perfect spot in which to display your handiwork, is up to you. W

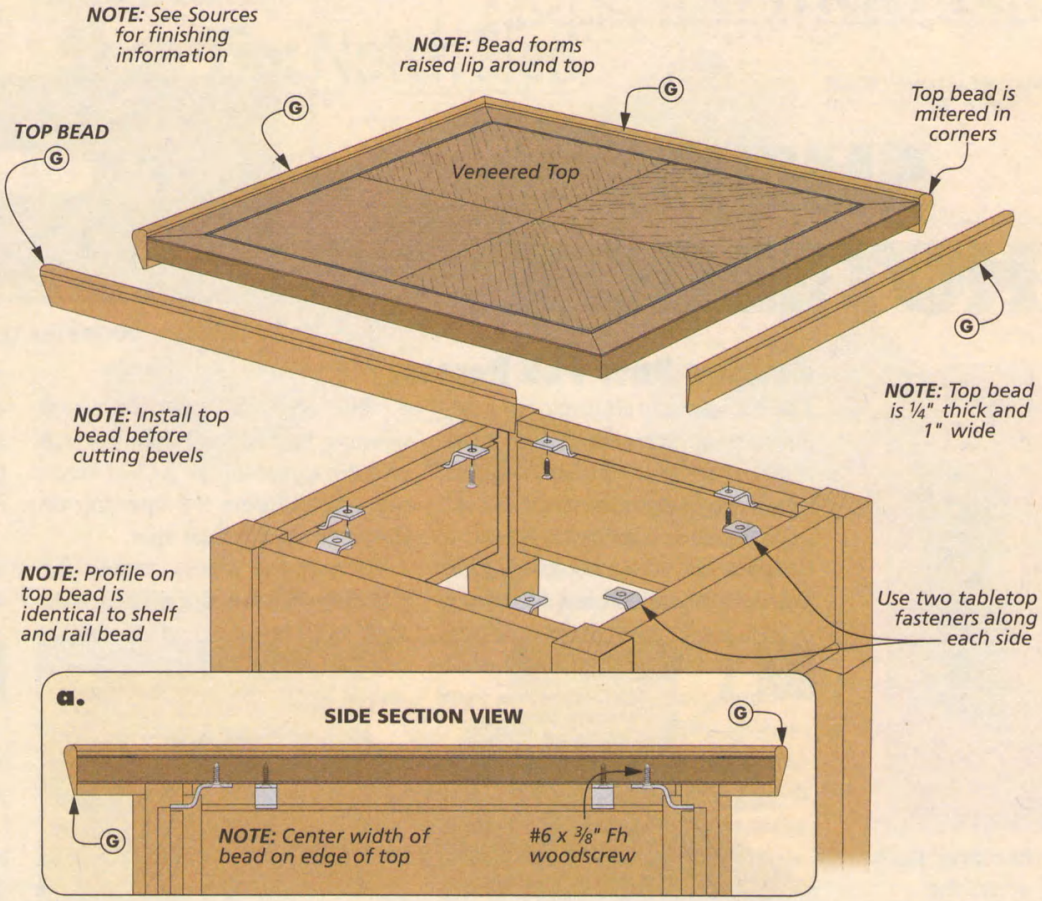

Materials, Supplies & Cutting Diagram

A	Top (1)	½ MDF - 14 x 14	G	Top Bead (1)	¼ x 1 - 64 rgh.
B	Shelf (1)	½ MDF - 11 x 11	•	(8) Tabletop Fasteners	
C	Legs (4)	1⅜ x 1⅜ - 25¼	•	(8) #6 x ⅜" Fh Woodscrews	
D	Apron Rails (4)	¾ x 3¼ - 10¼	•	(1) 24" x 96" Paper-backed Walnut Veneer	
E	Shelf Bead (1)	¼ x ¾ - 44 rgh.	•	(1) 24" x 96" Paper-backed Mahogany Veneer	
F	Apron Bead (1)	¼ x ⅞ - 44 rgh.	•	(2) ⅛" x 36" Black Inlay Strips	

¾" x 5" - 48" Walnut (1.7 Bd. Ft.)

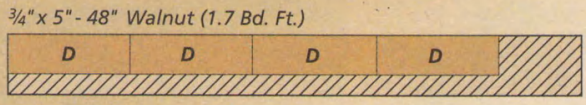

¾" x 5" - 48" Walnut (1.7 Bd. Ft.)

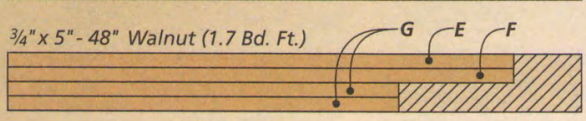

1¾" x 6½" - 30" Walnut (2.7 Bd. Ft.)

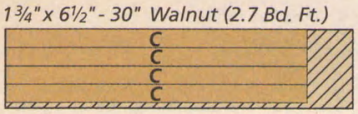

ALSO NEEDED: *One - 24" x 48" sheet ½" MDF*

NOTE: *Parts C, E, F, and G planed to final thickness*

SHOP NOTEBOOK

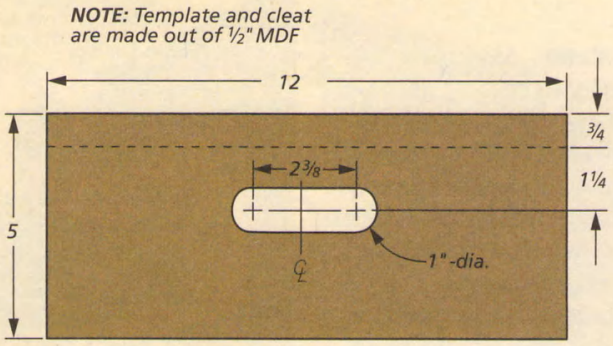

DOOR PULL TEMPLATE

Routing Door Pull Recess

▲ Recessed pulls allow the doors to slide freely past one another.

The doors of the sliding door cabinet on page 30 are fitted with brass pulls. These pulls fit into shallow recesses routed in the door stiles.

To create the recesses, I used a template and a bearing-guided bit. The template is nothing more than a piece of ½" MDF with an oval opening that is sized to fit the pull (see drawing above). A cleat along one edge centers the opening on the width of the door stile.

To rout the recess, attach the template to the door stile with double-sided tape. Then, using a dado cleanout bit and the template as a guide, rout out the waste in multiple passes (Figure 1).

Once the waste is removed, you can drill a couple of holes for the mounting screws (Figure 2).

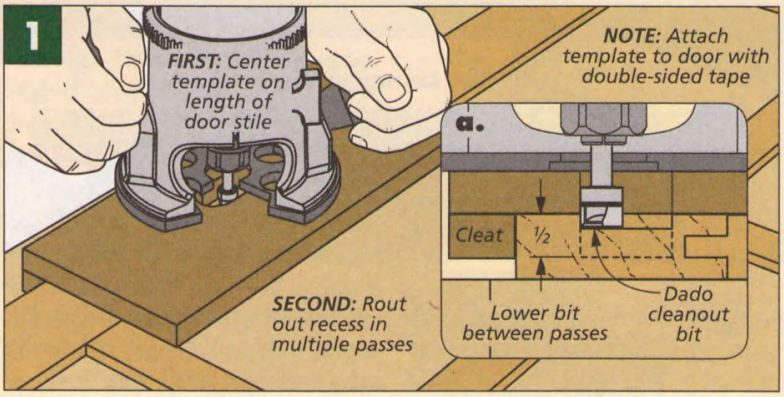

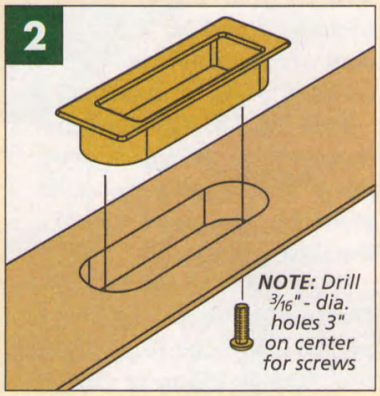

Taper Jig

To cut the tapers on the legs of the side table on page 20, I made a simple taper jig. But since these legs are tapered on all four faces, I had to come up with a jig that would hold the leg in the same relative position for all four taper cuts.

My solution was the jig shown below. It's just a piece of ½" MDF with a pair of cleats screwed to each end. Each pair of cleats forms an L-shaped pocket that holds the leg blank at an angle to the saw blade as you cut the tapers. But when I attached the cleats at the front end of the jig, I left a ¼"-wide gap between them. This gap is for a removable, ¼" hardboard spacer.

USING THE JIG. To use the jig, start by setting your rip fence so the edge of the jig is against the saw blade. Now you can cut the tapers on two adjacent faces of the leg. Then, before cutting the tapers on the two opposite faces of the leg, slip the ¼" hardboard spacer into the gap between the two cleats.

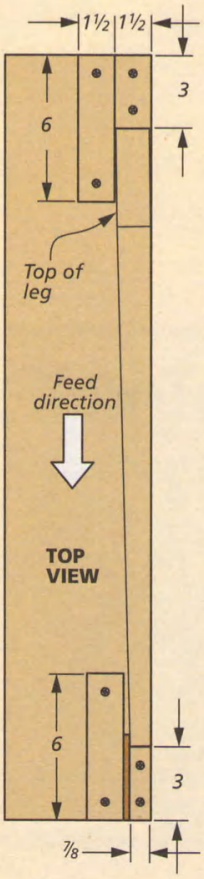

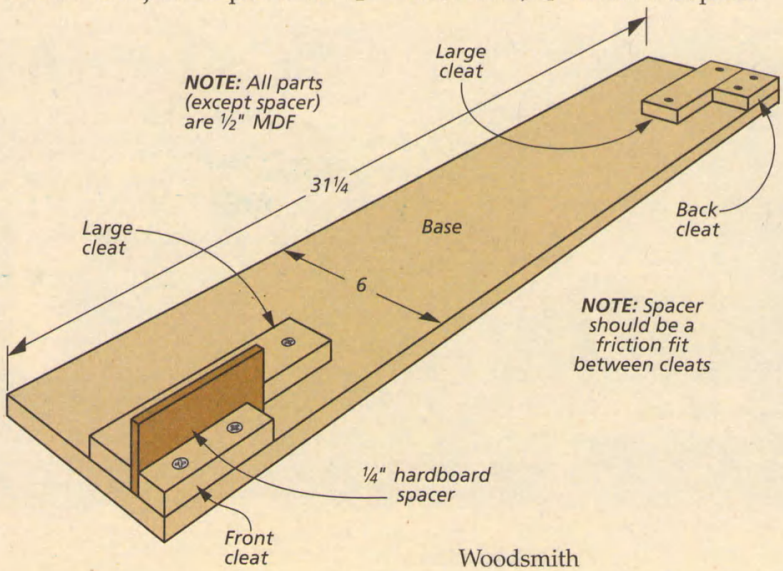

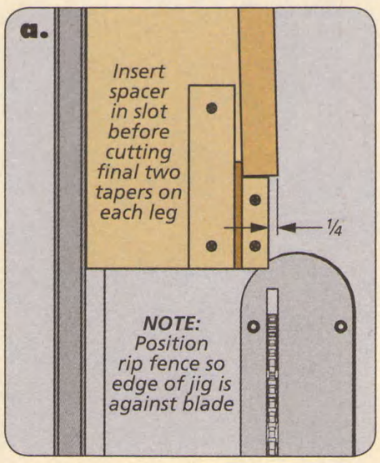

Routing Slots

Both the box and the lid of the potpourri box on page 16 are joined with splined miters. Since the slots for these splines are rather narrow (1/16") I decided to cut them on the router table using a slot cutter bit.

BOX SPLINES. To make the slots on the box sides, I built a simple sled to hold the workpieces at a 45° angle to the router table, as shown in Figure 1. This sled is just a couple of pieces of 3/4" plywood that are beveled on one end and screwed together. A cleat at the back edge of the sled supports the workpiece and prevents tearout.

To rout the slots, I first raised my slot cutter to the proper height. Then I taped a hardboard auxiliary fence to the router table fence, in front of the bit. With the router turned on, slowly push the fence back against the bit to create a zero-clearance opening. Once this is done, it's just a matter of routing a slot on each end of all four box sides.

LID SPLINES. The slots for the lid splines are routed in a similar fashion. But here, you can lay the workpiece flat on the router table and guide the piece past the bit with a beveled backer board, as you see in Figure 2. To rout the slot on the opposite end, just flip the backer board over so it's angled in the opposite direction (Figure 2b).

Keep in mind that you'll have to lower the height of the slot cutter from where it was when you routed the slots in the box sides. (You can use the same auxiliary fence.) Also, when routing the slots for the lid splines, make sure that you do so with the lid pieces face down.

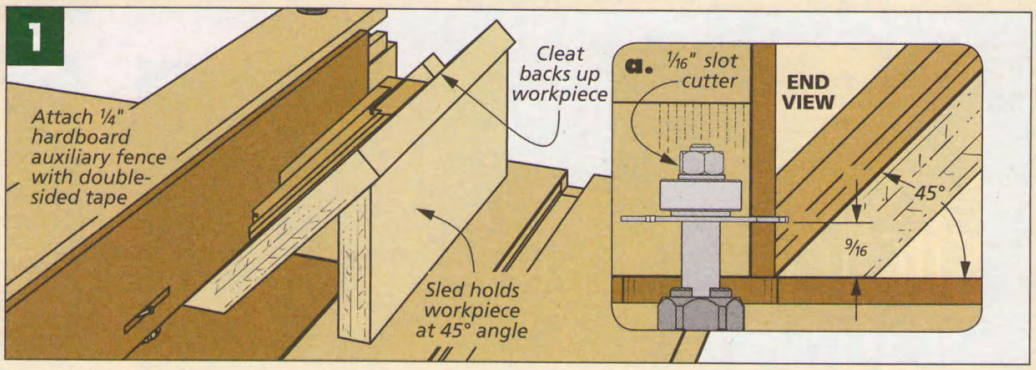

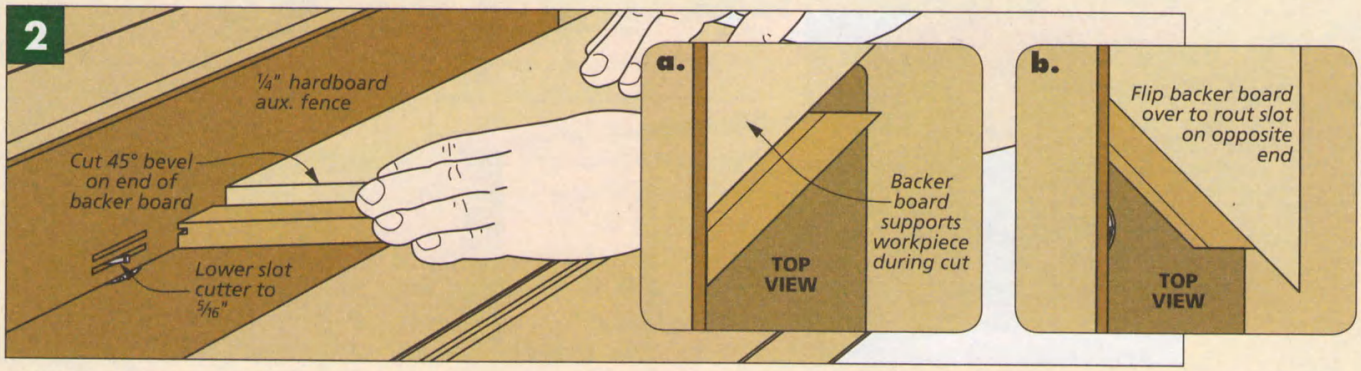

Cross-Grain Splines

The splines used to reinforce the miter joints in the potpourri box are cross-grain splines. In other words, the grain of the spline runs perpendicular to the joint line. This makes the splines much less likely to split along the miter joint.

Making cross-grain splines is a simple, two-step process. First, I cut a couple of kerfs on each end of a blank, as shown in Figure 1. The distance between the rip fence and the blade should match the desired thickness of your splines (1/16"). It's important to use a push block and a zero-clearance insert for this step.

Next, flip the blank on its side and reposition the rip fence in order to cut the splines to width (length). Make sure to position the fence so the splines fall to the "outside" of the blade, as you see in Figure 2. Then, using a push block again, simply cut the splines free from the blank. To cut the second pair of splines from the blank, you'll have to reposition the rip fence. W

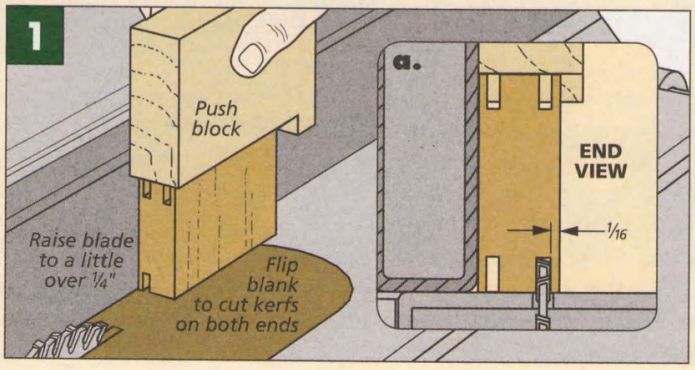

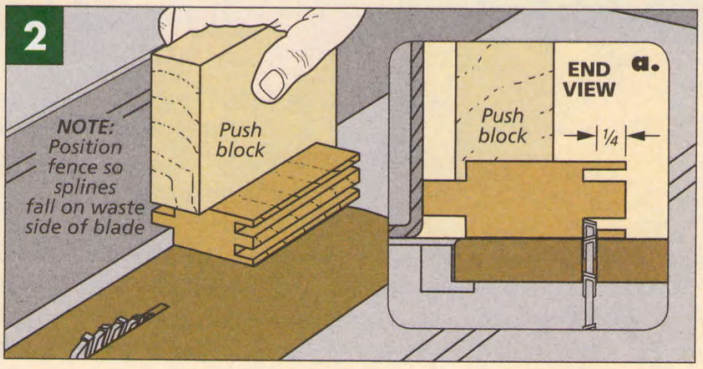

sliding-door Display Cabinet

The perfect combination of style and functionality makes this cabinet an ideal place to exhibit a few special items.

Whether it's showing off a prized collection of first editions or a few pieces of a grandchild's school-made pottery, there's no end to the uses for a display cabinet. And the one in the photo above offers both a stylish and practical design.

The sliding doors offer a nice alternative to hinged doors, and they're also easy to make. The elegant look of the upper cabinet glass doors is achieved by using thin dividers over a single, large pane of glass. This creates a divided-light look without all the fuss of dealing with individual panes.

OPTIONS. But what's really nice about this project is that it offers plenty of options for customization. By omitting the upper sliding doors, it makes an attractive bookcase (photo on back cover). And if you're looking for something smaller, you can build just the lower cabinet, for use as a sideboard or entertainment center, as shown on page 37.

CONSTRUCTION DETAILS

OVERALL DIMENSIONS:
42¾"W x 15⅜"D x 76¾"H

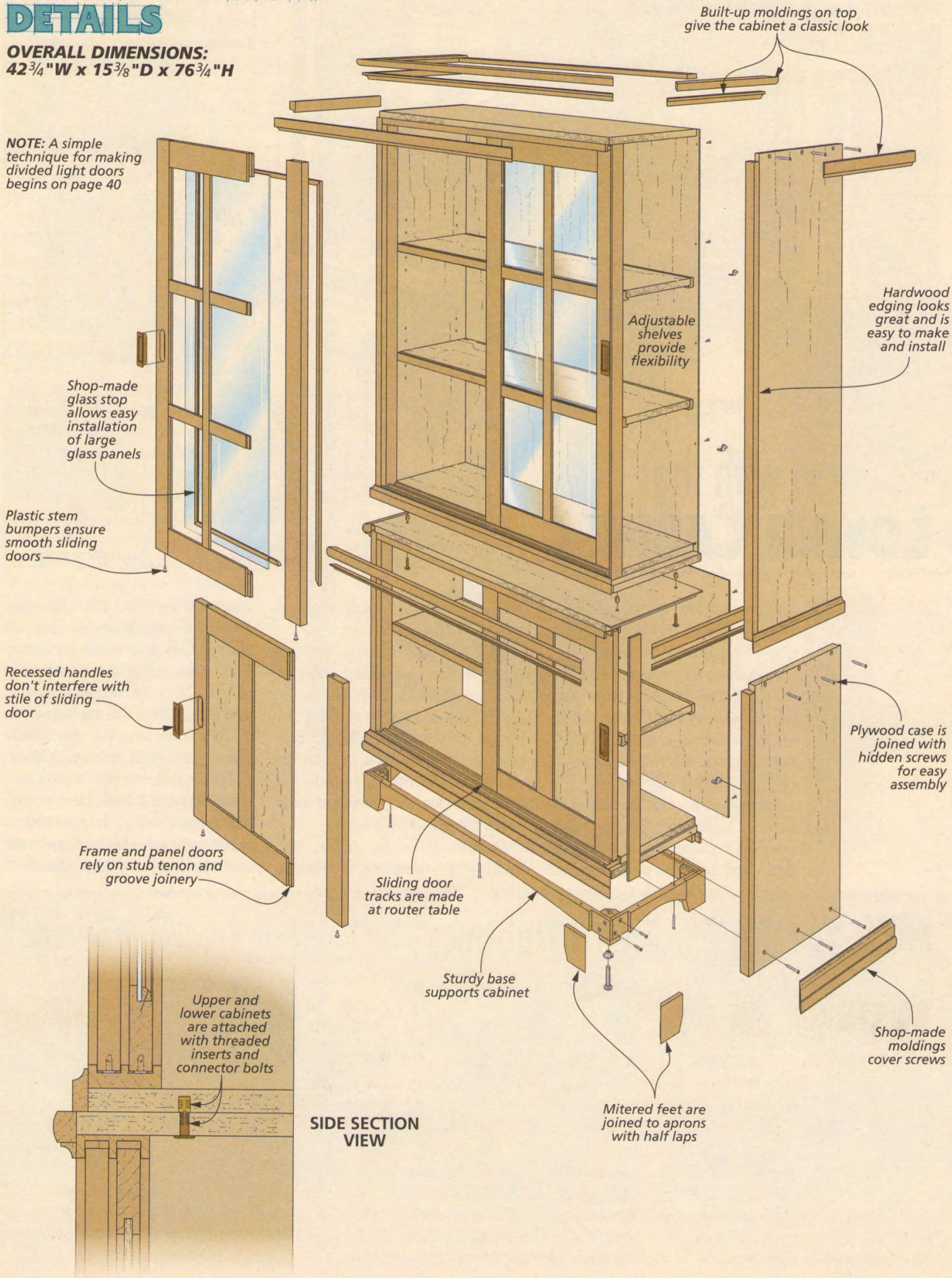

SIDE SECTION VIEW

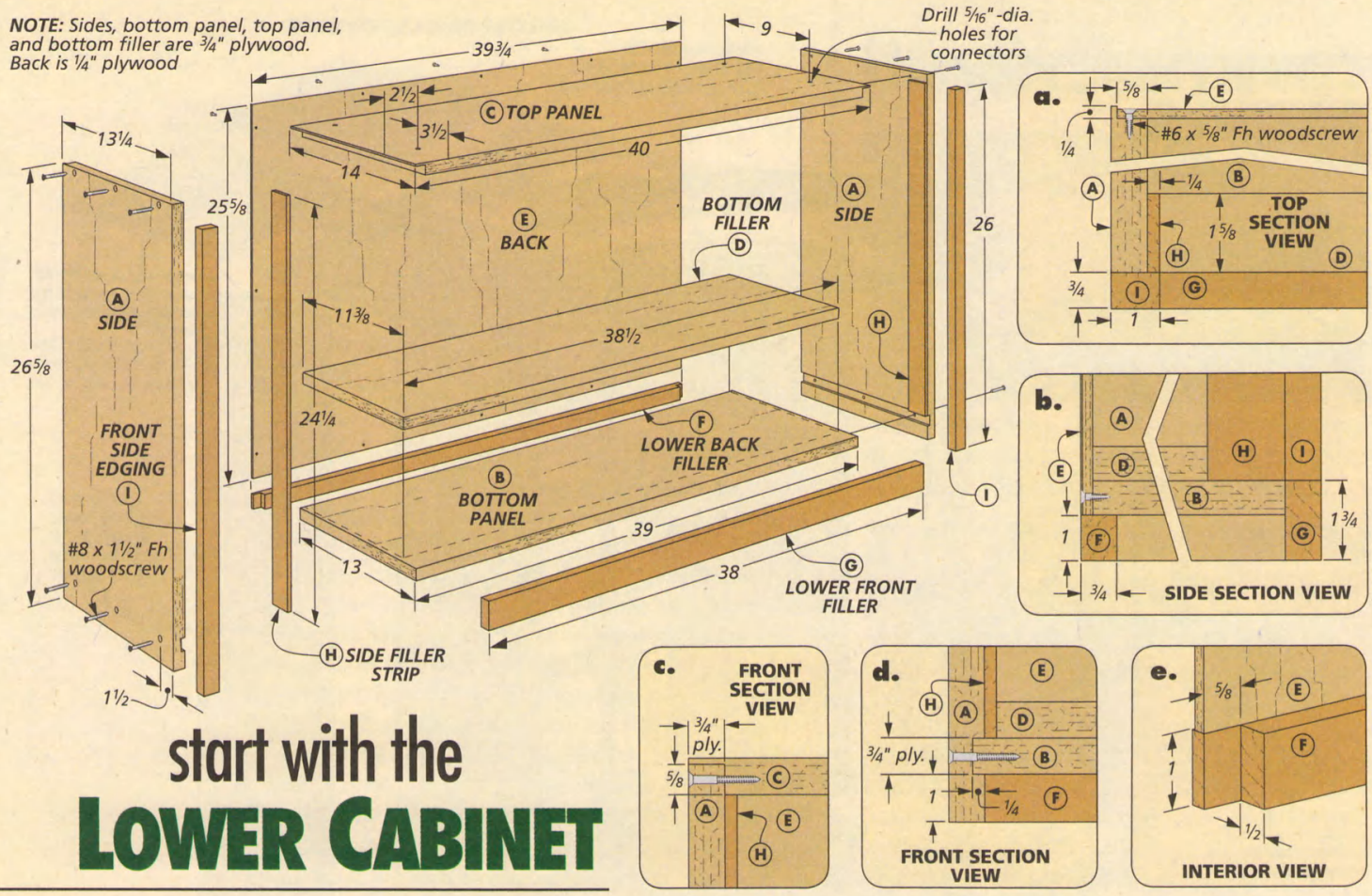

start with the LOWER CABINET

The lower cabinet not only provides a sturdy base for the upper unit, but it also contains all the joinery and construction techniques you'll use for the rest of the project. So that's the place to get started. As you can see in the drawing above, the cabinet starts out as a simple plywood case, assembled with screws.

SIDES. Start by cutting the sides to final size. Then cut the dado near the bottom of each side. This dado will hold the bottom panel. The box below shows you how to set up and make this cut.

TOP & BOTTOM. Now you can turn your attention to the top and bottom. The bottom is simply cut to size and set aside. After cutting the top panel, you'll need to add rabbets on the ends. You can cut the rabbets on the rear edges of the top and sides for the plywood back panel using the same setup.

ASSEMBLY. With the sides, top, and bottom complete, it's time to assemble the basic case. Begin by fitting the bottom panel in the dado in the sides and drilling countersunk screw holes. Then, add a dab of glue, and drive the screws to attach the sides. The rabbet on the top panel fits over the sides. Once again, drill screw holes and attach the panel with screws.

BOTTOM FILLER & BACK. Next comes the bottom filler. It provides a flush surface for the bottom of the cabinet and creates a "pocket"

How-To: Cut Dadoes & Rabbets

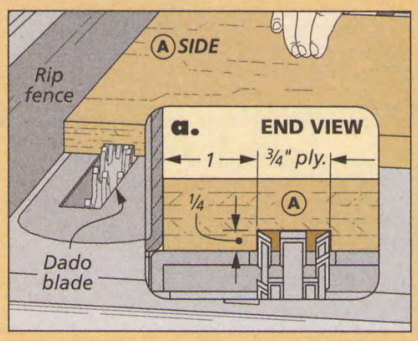

Dadoes. *With a dado blade set to equal the thickness of the plywood, cut the dadoes for the bottom.*

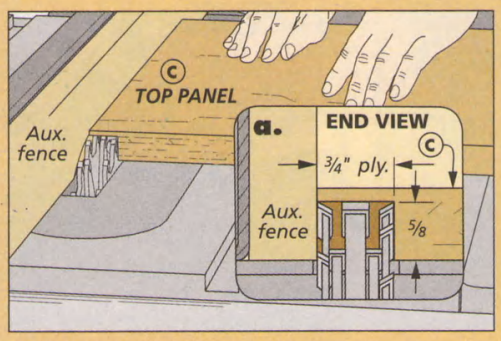

Rabbets. *Using the same dado blade setup, attach an auxiliary fence to the rip fence to cut the rabbets on the ends of the top panel.*

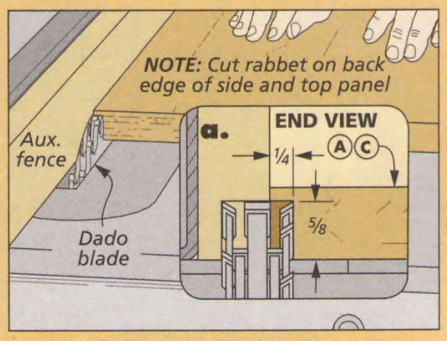

Back. *Adjust the fence to expose only ¼" of the dado blade and cut the rabbets for the back in the sides and top.*

for the track. Just cut it to final size and install the it with glue. Finally, cut the ¼" plywood back to size and attach it with screws.

SIDE FILLER STRIPS & EDGING. The side filler strips flush the inside of the cabinet with the edging you'll add next. You'll need to resaw and plane these down to ¼" thick. All you need to do then is cut them to final size and install them in the case with glue and clamps. Then cut the hardwood edging strips to size and glue them to the plywood.

FRONT & BACK FILLERS. Detail 'e' on the opposite page shows how the end of the back filler strip is rabbeted to fit into the sides. The lower front filler strip is glued in place to flush out the front of the cabinet so you can add the moldings later.

DOOR TRACKS. With the filler strips in place, you're ready to add the upper and lower door tracks. After cutting a couple of extra-long blanks to width, I routed grooves in both pieces to hold the doors, as shown in the box at right.

Note the different depths of the grooves. The upper track's grooves are deeper to allow you to install the doors simply by lifting them up and setting them into the lower track. Once you've cut the tracks to final length, you can glue them in place (details 'c' and 'd').

SHELF PIN HOLES. After laying out the hole locations, I used a hand-held drill to drill the shelf pin holes inside the cabinet. I also added a stop collar on the bit to make sure not to drill too deep.

MOLDINGS. To give the cabinet a more refined look, I added bullnose and cove moldings on the upper and lower edges. I started by making the bullnose molding at the router table (detail 'b').

The bottom two drawings in the box at right show you how to get both the narrow upper and wide lower cove moldings from one blank. I simply routed the profile on both edges, then ripped the individual pieces to width.

When the molding was finished, I mitered the ends and attached the pieces to the case with glue as shown in details 'c' and 'd.'

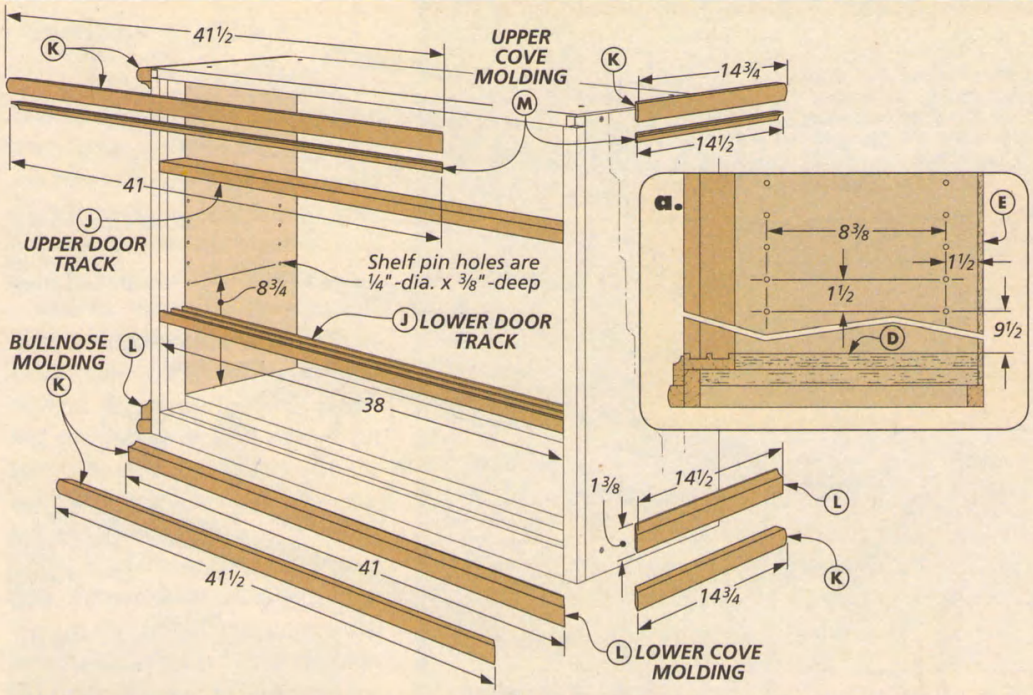

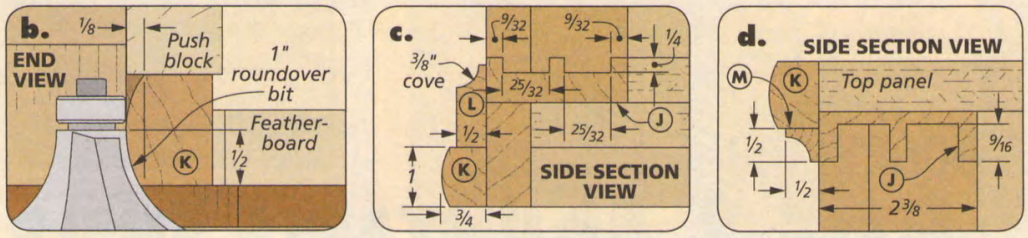

How-To: Rout the Track & Cove Molding

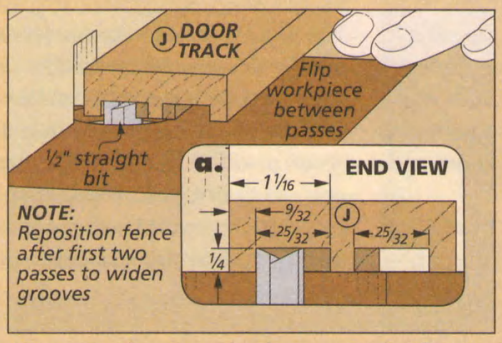

Door Tracks. *Rout both grooves by flipping the workpiece in between passes. Then reposition the fence to widen the grooves.*

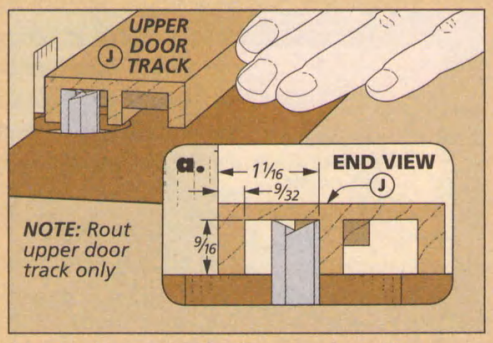

Upper Door Track. *To complete the upper track, raise the bit and make a second series of passes to deepen the grooves.*

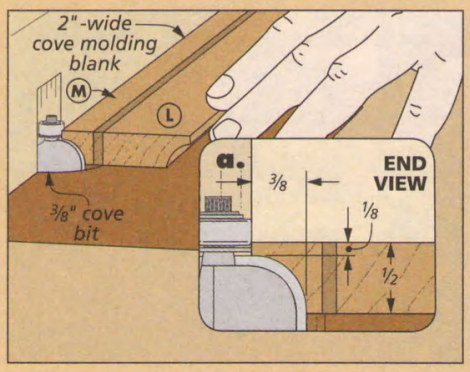

Rout the Coves. *Start with an extra-wide workpiece so you can rout the coves for both the upper and lower moldings safely.*

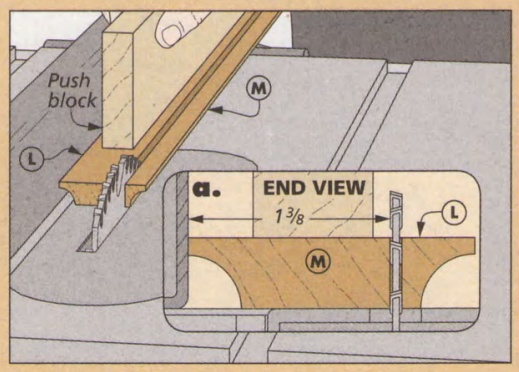

Rip to Width. *Rip the individual strips to final width with the wider piece against the fence. This way, the narrower molding falls safely to the side.*

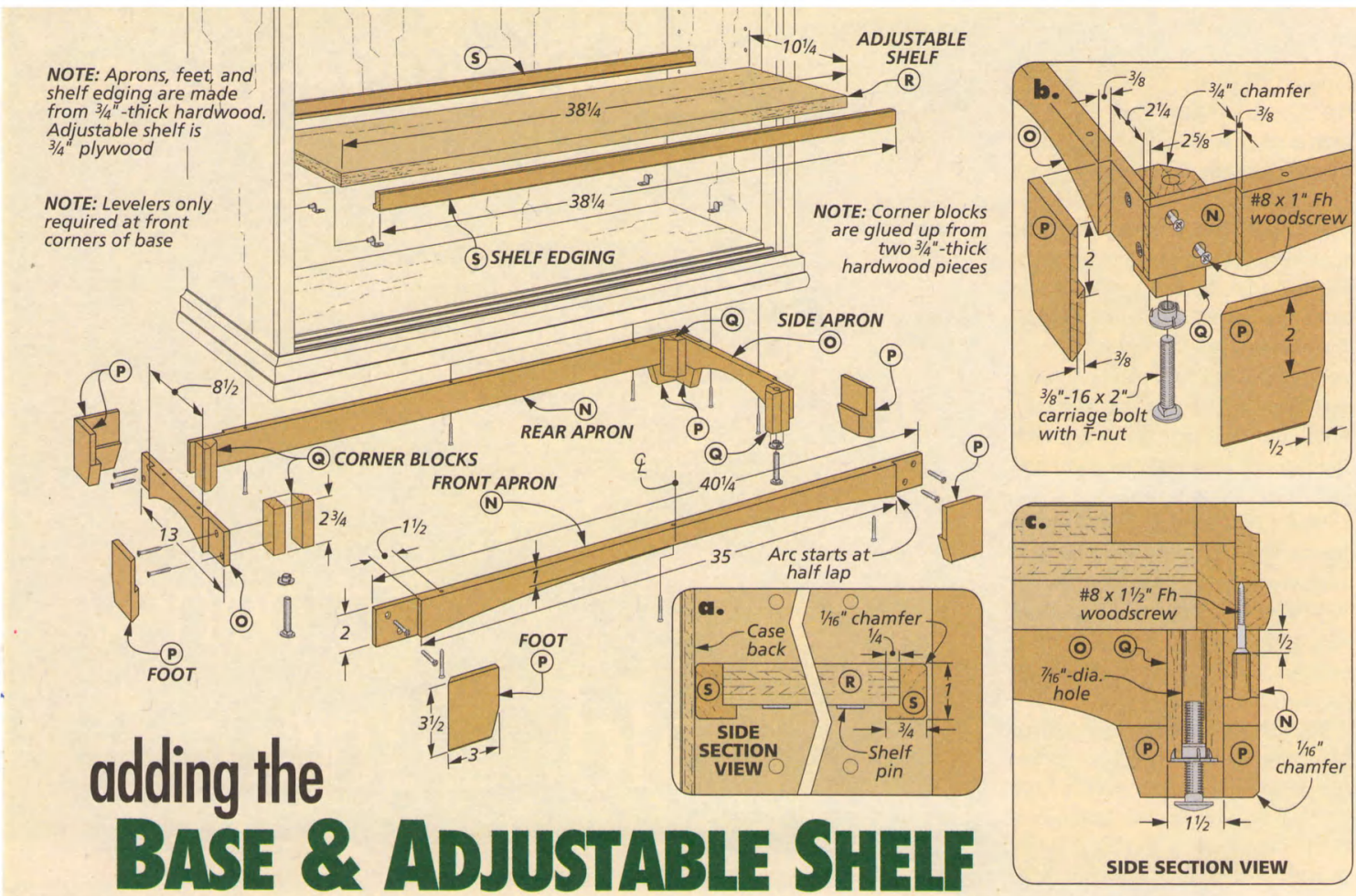

adding the BASE & ADJUSTABLE SHELF

The lower cabinet rests on a sturdy base. One of the advantages of this design is that it keeps the cabinet up off the floor, making the contents of the lower cabinet more accessible. The base also provides an easy means of leveling the cabinet for uneven floors.

The base consists of front, rear, and side aprons joined to corner blocks with screws. The corner blocks also incorporate levelers. The front and side aprons feature gentle curves. Mitered feet are joined to the apron with half laps.

APRON. I started by cutting the apron pieces to final size. After that, you can get to work cutting the half laps on both ends of each piece. For this, I installed a dado blade in the table saw and an auxiliary fence on my miter gauge. Use a mating test piece to sneak up on the blade height for perfect-fitting half laps.

I also drilled a series of countersunk screw holes in the bottom edge of each of the apron pieces (detail 'c,' above). These holes allow you to fasten the base to the lower cabinet with screws.

How-To: Cut the Apron Joinery & Curves

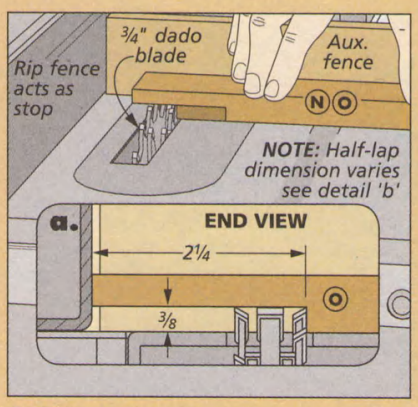

Half-Lap Joints. *With an auxiliary fence on the miter gauge, use the rip fence as a stop to cut the half laps.*

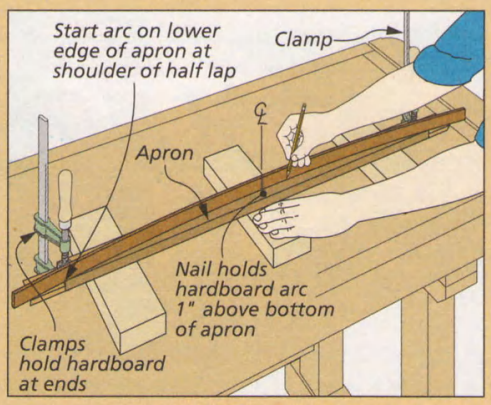

Layout. *A strip of ¼" hardboard is perfect for laying out the curve. Just bend it to the high point at the centerline and trace the shape.*

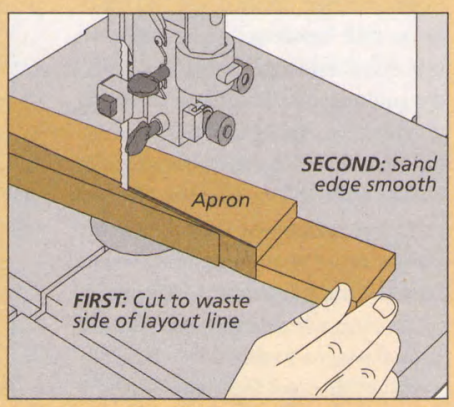

Cut the Curves. *Use a ¼" blade in the band saw and cut just to the waste side of your layout marks.*

With the half laps complete, I laid out the curves on the side and front aprons using a strip of hardboard. Next, I moved to the band saw and cut the curves. The How-To box on the opposite page walks you through each of these steps.

FEET. Now it's time to cut the pieces that form the feet. The box below shows how I cut both the half laps and miters by starting with oversized pieces. After completing the cuts, lay out and cut the small taper in each piece, as shown in detail 'b' on the opposite page. I also chamfered the bottom edges at the router table.

CORNER BLOCKS. The corner blocks are glued up from two pieces of ¾"-thick stock. After cutting the corner blocks to size, tilt your table saw blade to 45° and cut the chamfer on the inside corner.

The two front blocks also serve as shop-made levelers for the base. As you can see in details 'b' and 'c,' I simply drilled a hole through the blocks and installed a T-nut. A carriage bolt in the insert provides plenty of adjustibility.

ASSEMBLY. At this point, you're ready to assemble the base. For this, I started by gluing and clamping the corner blocks flush to the ends of the side aprons. You can then drill countersunk pilot holes through the aprons and into the blocks and drive in the screws. After removing the clamps, repeat the same process with the front and back aprons, making sure to keep the ends aligned with the sides.

All that remains is to add the feet. I began by assembling the right and left halves with tape holding the miters. Then I added glue to the joint and to the faces of the half laps. You can simply clamp the feet in place on the aprons and set the assembly aside to let the glue dry.

ADJUSTABLE SHELF AND EDGING. The next step is to add the adjustable shelf. After cutting the plywood shelf to final size, you can turn your attention to the hardwood edging. As you can see in detail 'a' on the opposite page, the edging has a rabbet that wraps around the edge of the shelf. Once again, the key to making the edging safely is to start with a wide blank. The Shop Tip above shows the process.

I started by routing the outside of the groove, then flipped the blank and routed the opposite side. To complete the wide groove, rout away the waste left in the center by resetting the fence.

Now install a rip blade in the table saw and rip the blank, forming two strips of edging. I also routed a small chamfer on the corners of the edging. After gluing the edging to the shelf, you can set it aside and get to work on the doors.

Shop Tip: Shelf Edging

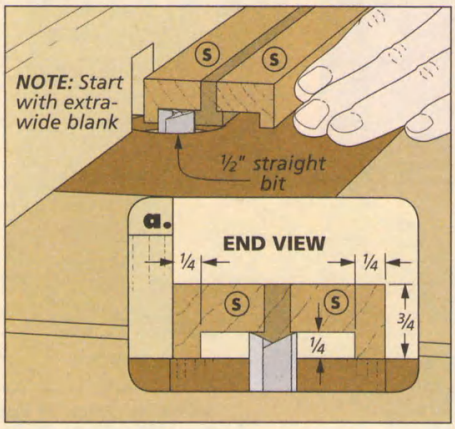

Rout the Wide Groove. *An easy and safe way to make the edging is to rout the groove in an extra-wide blank.*

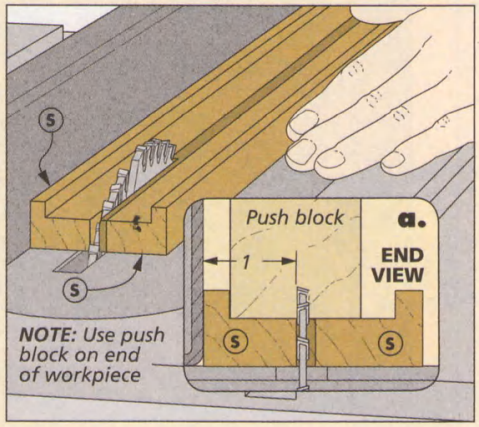

Ripping the Blank. *Set the rip fence to the final width of the edging and use a push block to rip the edging to final size.*

How-To: Cut the Feet

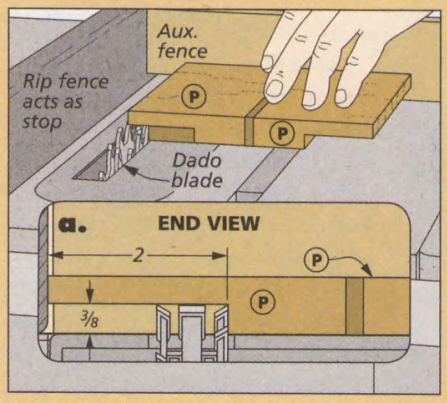

Half Laps. *Starting with an oversized blank, use the dado blade to cut the half laps in both ends of the blank.*

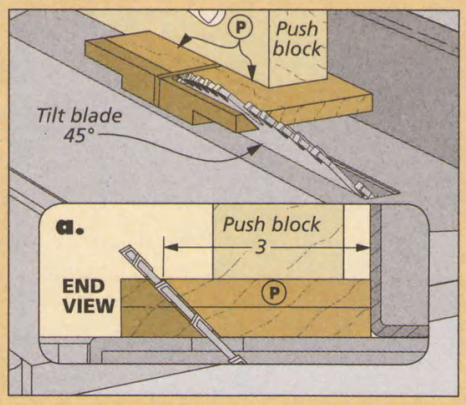

Miter Joints. *Begin by setting the table saw blade to 45° and then make the miter cut using a push block.*

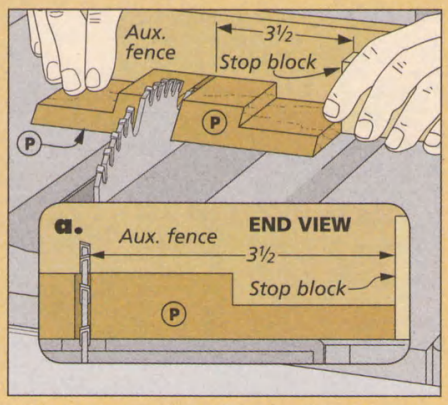

Cut to Length. *With the blade set to 90°, use the miter gauge to crosscut each foot to length.*

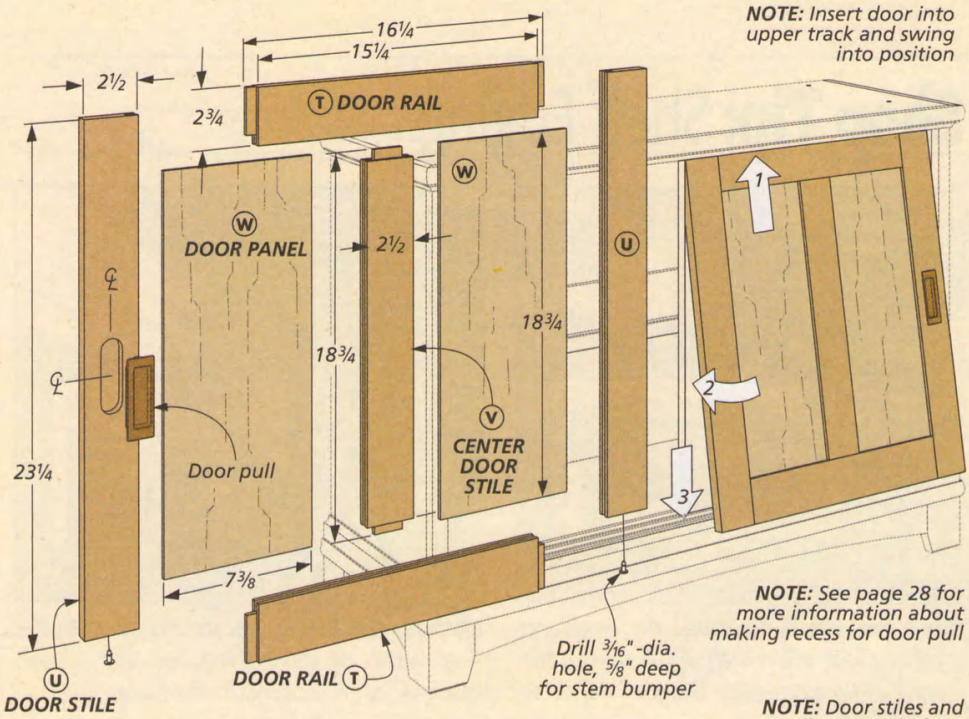

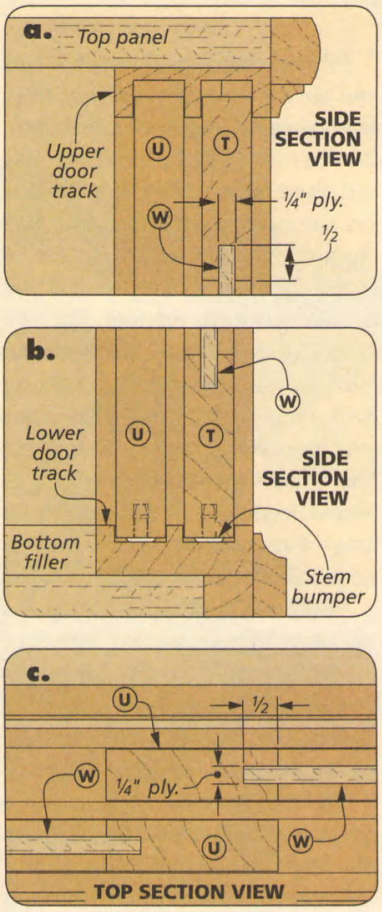

building the sliding CABINET DOORS

With the moldings in place and the base attached, all that remains to complete the lower cabinet is to add the doors. The sliding doors are a nice departure from standard, hinged doors. Not only do they add an interesting visual appeal, but they also allow you to skip the hassle of installing fussy hinges.

I used a fairly straightforward frame and panel design for the doors. Simple stub tenon and groove joinery is the perfect way to build long-lasting doors, and it's also an easy technique to master.

You have the option of using either wood or glass panels (see photos at the bottom of the opposite page). The basic construction is the same for both. But I'll show you a router technique that allows you to quickly make an opening for the glass. And by using shop-made glass stop, it's easy to replace a damaged panel.

DOORS. Like any frame and panel door, making these doors starts with the rails and stiles. However, as you can see in the drawing above, I've also included a center stile to divide the door panels. This not only gives the wood panel doors a slightly more formal look, but it also accommodates the glass option more effectively by allowing you to use two smaller panels rather than a single larger one.

There's one thing to keep in mind whenever making door parts. Make sure the stock is perfectly flat. Any twist or bend will make it very difficult to build a door that fits well.

CUT THE GROOVES & TENONS. The next step is to cut the grooves for the panels in all the door parts. The illustration at left shows you an easy way to do this and keep the groove centered on the thickness of the workpiece.

Start by setting the rip fence to make a cut just off center on one of the pieces. Make the first cut, then flip the workpiece end-for-end and make another pass. The resulting groove will be perfectly centered. Test the fit of the panel and adjust the

How-To: Stub Tenons & Grooves

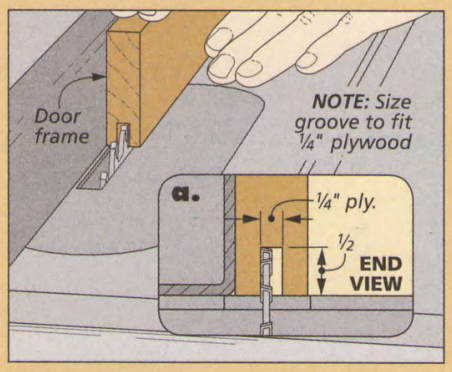

Cut the Grooves. *With the blade roughly centered on the thickness, make a first pass, then flip the workpiece and repeat.*

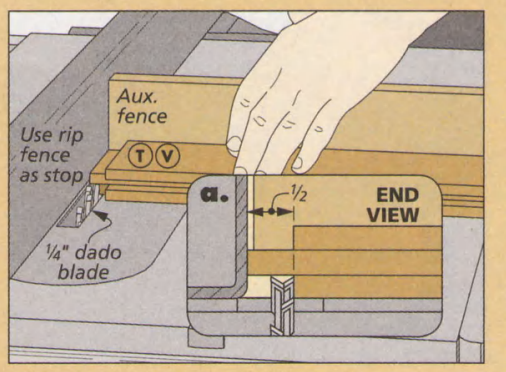

Stub Tenons. *Set the blade height by sneaking up on a snug-fitting tenon, checking the fit in one of the stiles after each adjustment.*

fence for another pass if necessary. In addition to cutting this groove in all the rails and stiles, you'll want to remember to cut it on both sides of the center stile as well.

Cutting the tenons is simply a matter of installing a dado blade and an auxiliary fence on the miter gauge. Use a scrap piece to sneak up on the right blade height for a snug-fitting tenon. I use the rip fence as a stop to make sure all the tenons are exactly the same length.

STEM BUMPERS. To make sure the doors slide smoothly, I added nylon stem bumpers to the bottom edges. All you need to do is drill 3/16"-dia. holes in the bottoms of the stiles (detail 'b,' on the opposite page).

PANELS & ASSEMBLY. Now it's time to prepare the panels and assemble the doors. As I mentioned earlier, I used 1/4" plywood for the door panels. After cutting them to size, I like to dry-fit the door before adding glue to the assembly. After that, simply glue up the frame around the panels, clamping the doors across each rail.

After the glue dries, you'll need to rout the recesses for the door handles. Shop Notebook on page 28 has a few tips for doing this.

ROUTING FOR GLASS DOORS. If you choose to make glass panel doors, the process is nearly the same. But instead of adding the panels when assembling the frame, you simply glue up the frames and set them aside to dry. Then you can use a rabbeting bit in your router to remove the lip on the inside of the doors. The drawing at right shows you what I mean. After cleaning up the corners with a chisel, just set the glass in place and add the glass stop shown on page 41.

INSTALLING THE DOORS. The main drawing on the opposite page shows how to install the doors. Simply insert the upper edge of the door into the track, swing the door into position, and then set it into the lower track.

Materials, Supplies & Cutting Diagram (Lower Cabinet & Base)

A	Sides (2)	3/4 ply. - 13 1/4 x 26 5/8
B	Bottom Panel (1)	3/4 ply. - 13 x 39
C	Top Panel (1)	3/4 ply. - 14 x 40
D	Bottom Filler (1)	3/4 ply. - 11 3/8 x 38 1/2
E	Back (1)	1/4 ply. - 39 3/4 x 25 5/8
F	Lower Back Filler (1)	3/4 x 1 - 39 3/4
G	Lower Front Filler (1)	3/4 x 1 3/4 - 38
H	Side Filler Strips (2)	1/4 x 1 5/8 - 24 1/4
I	Front Side Edging (2)	3/4 x 1 - 26
J	Upper/Lower Door Tracks (2)	3/4 x 2 3/8 - 38
K	Bullnose Molding (1)	3/4 x 1 - 150 rgh.
L	Lower Cove Molding (1)	1/2 x 1 3/8 - 75 rgh.
M	Upper Cove Molding (1)	1/2 x 1/2 - 75 rgh.
N	Front/Rear Aprons (2)	3/4 x 2 - 40 1/4
O	Side Aprons (2)	3/4 x 2 - 13
P	Feet (8)	3/4 x 3 - 3 1/2
Q	Corner Blocks (4)	1 1/2 x 1 1/2 - 2 3/4
R	Adjustable Shelf (1)	3/4 ply. - 10 1/4 x 38 1/4
S	Shelf Edging (2)	3/4 x 1 - 38 1/4
T	Door Rails (4)	3/4 x 2 3/4 - 16 1/4
U	Door Stiles (4)	3/4 x 2 1/2 - 23 1/4
V	Center Stiles (2)	3/4 x 2 1/2 - 18 3/4
W	Door Panels (2)	1/4 ply. - 7 3/8 x 18 3/4

- (4) Stem Bumpers
- (4) Shelf Supports
- (2) 3/8"-16 T-Nuts
- (2) 3/8"-16 x 2" Carriage Bolts
- (2) 90 x 31 mm Recessed Pulls w/Screws
- (14) #6 x 5/8" Fh Woodscrews
- (16) #8 x 1" Fh Woodscrews
- (22) #8 x 1 1/2" Fh Woodscrews

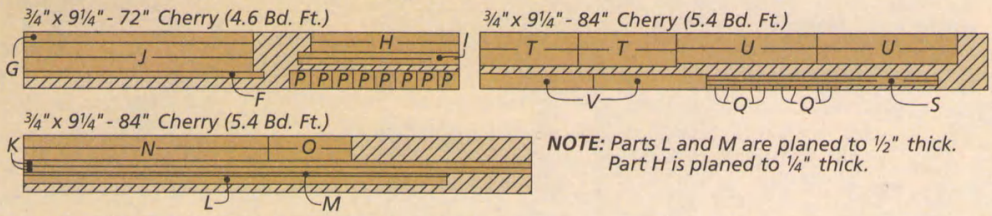

NOTE: Parts L and M are planed to 1/2" thick. Part H is planed to 1/4" thick.

ALSO NEEDED: One sheet of 48" x 96" 3/4" Cherry plywood. One sheet of 48" x 48" 1/4" Cherry plywood.

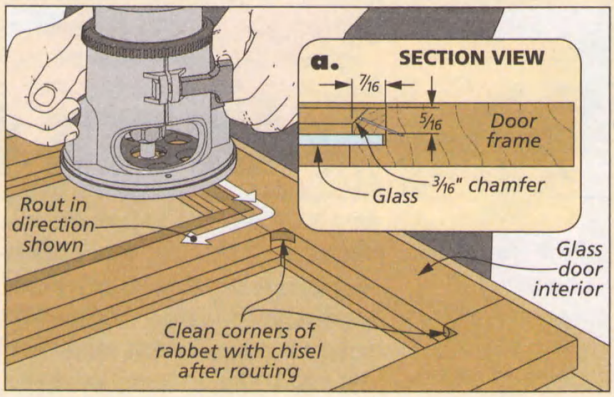

Rout a Recess. *Using a router and a 1/2" rabbeting bit, rout out the back of the openings in the doors for the glass.*

▲ If you plan to use the cabinet for storage, wood-panel doors will conceal the contents inside. They also provide a classic look and are easy to build.

▲ Beveled glass panels give the cabinet a completely different look. They're a great choice for an entertainment center since they allow infrared signals to pass through.

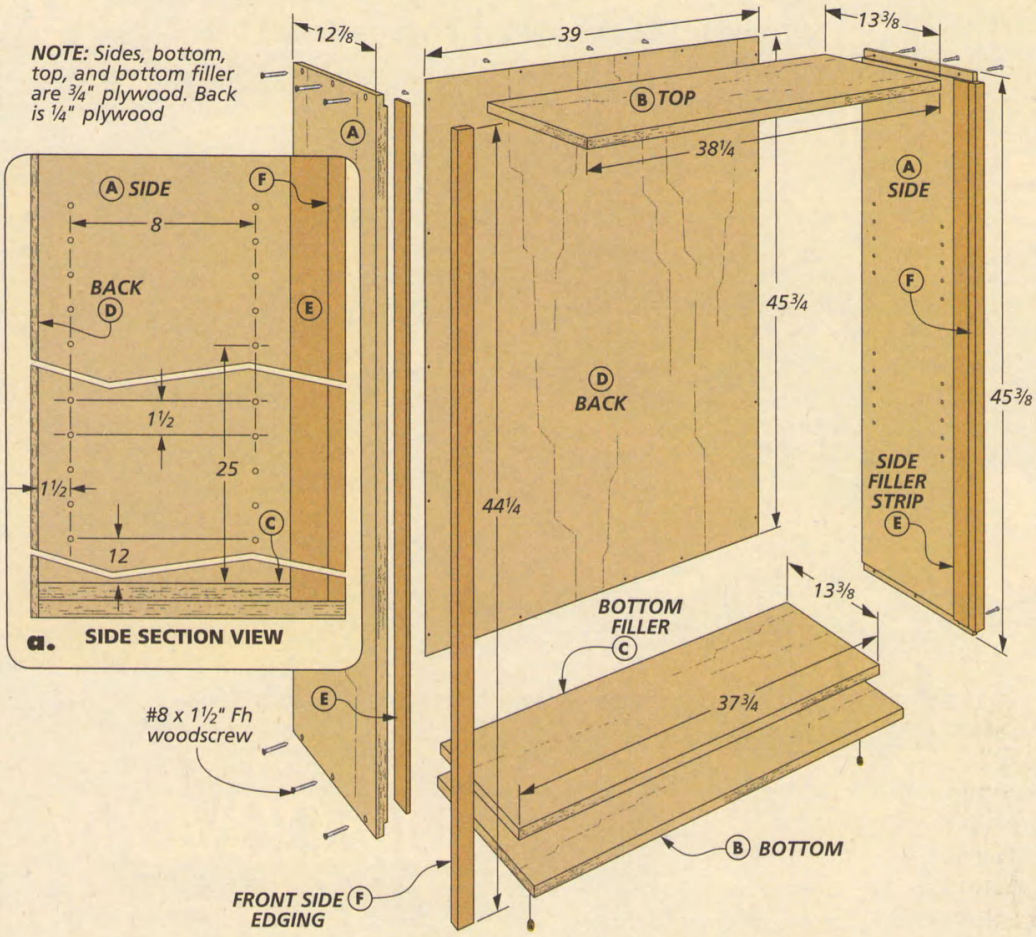

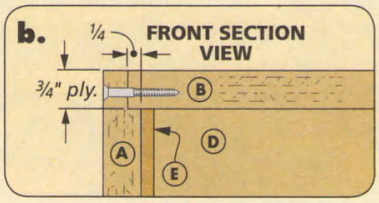

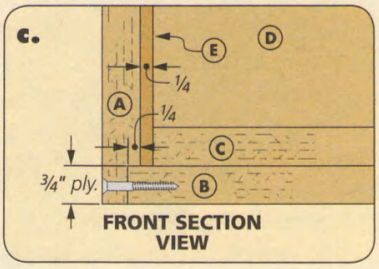

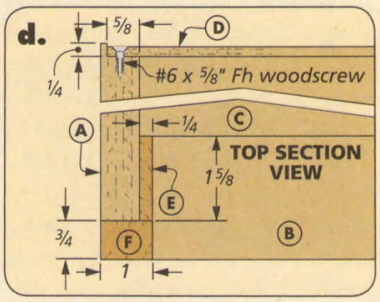

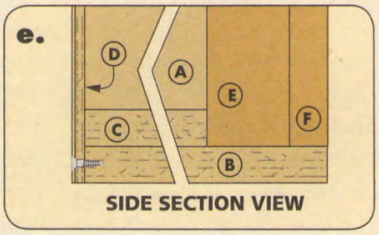

starting the UPPER CABINET

With the base and lower cabinet complete, you're ready to get started on the upper cabinet. The good news here is that, aside from the dimensions, there are only a few differences from the lower cabinet. Most of the joinery, moldings, assembly processes, and techniques are exactly the same. You'll start by building the basic case.

CASE CONSTRUCTION. As before, you can begin by cutting the sides, top, and bottom to final size. Next, install a dado blade and auxiliary rip fence and cut the rabbets on the ends of the sides. Then set the fence to expose ¼" of the dado blade and cut the rabbet for the back on the back edge of the sides.

ASSEMBLY. Now you can drill countersunk screw holes in the sides, and assemble the case using glue and screws. After cutting the bottom filler to final size, I attached it with glue. The ¼" plywood back is then attached with screws.

FILLERS & EDGING. The side filler strip and front edging work together as they did in the lower cabinet to protect the cabinet sides and hide the plywood edges. You can see how they're attached in details 'd' and 'e' above.

SHELF PIN HOLES. Detail 'a' shows the locations for the shelf pin holes. Once again, I laid out the

How-To: Rounded Molding

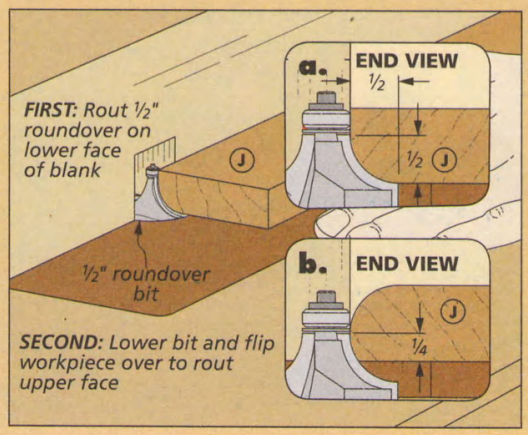

Roundover. *With the blank ripped to final width, start by rounding over one edge on the router table. Note the different bit height for the second pass.*

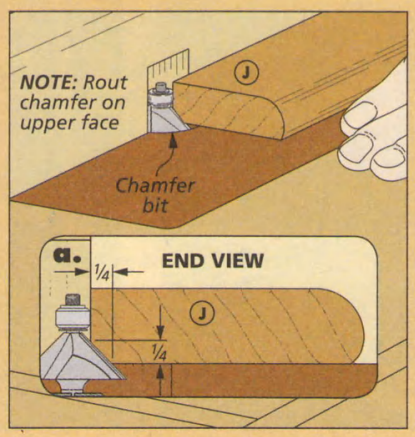

Chamfer. *Complete the molding by installing a chamfer bit and routing the chamfer on the opposite edge.*

locations and then just used a hand-held drill to drill the holes.

DOOR TRACKS. The door tracks are the next component to be installed. (Note: If you're building the cabinet without doors, you can skip routing the door grooves in the lower track and leave out the upper track entirely.)

MOLDINGS. As you can see in the drawing at right, the moldings are a bit different here. In addition to the cove moldings, I added a rounded-edge molding at the top of the cabinet to create a crown molding effect (detail 'b'). You can see how I made the rounded molding in the drawings at the bottom of the opposite page.

The cove moldings are made using the same techniques as before (refer to page 33 for details), but they're arranged a little differently. On this cabinet, I used the wider cove molding on both the upper and lower edges. Then, as shown in detail 'b,' at right, I added the narrower cove molding to the top.

After building up these layers, the rounded molding completes the look. To install this molding, just miter the ends and glue it in place. I also added a filler strip in back to complete the top.

SHELVES & EDGING. This taller cabinet features two adjustable shelves. After cutting the shelves to final size, I attached the same type of edging as I used for the shelf in the lower cabinet (page 35).

CONNECTING THE CABINETS. Details 'c' and 'd' show how I used threaded inserts and connector bolts to connect the cabinets. This makes it easy to take them apart if you need to move the cabinet.

The box at right gives you the details of how to mark the holes on the bottom of the upper unit for the threaded inserts. After drilling the holes, turn the cabinet upside down and set it on the floor to install the inserts. The thing to keep in mind here is to be careful to keep them straight in the holes to guarantee a good fit for the connector bolts.

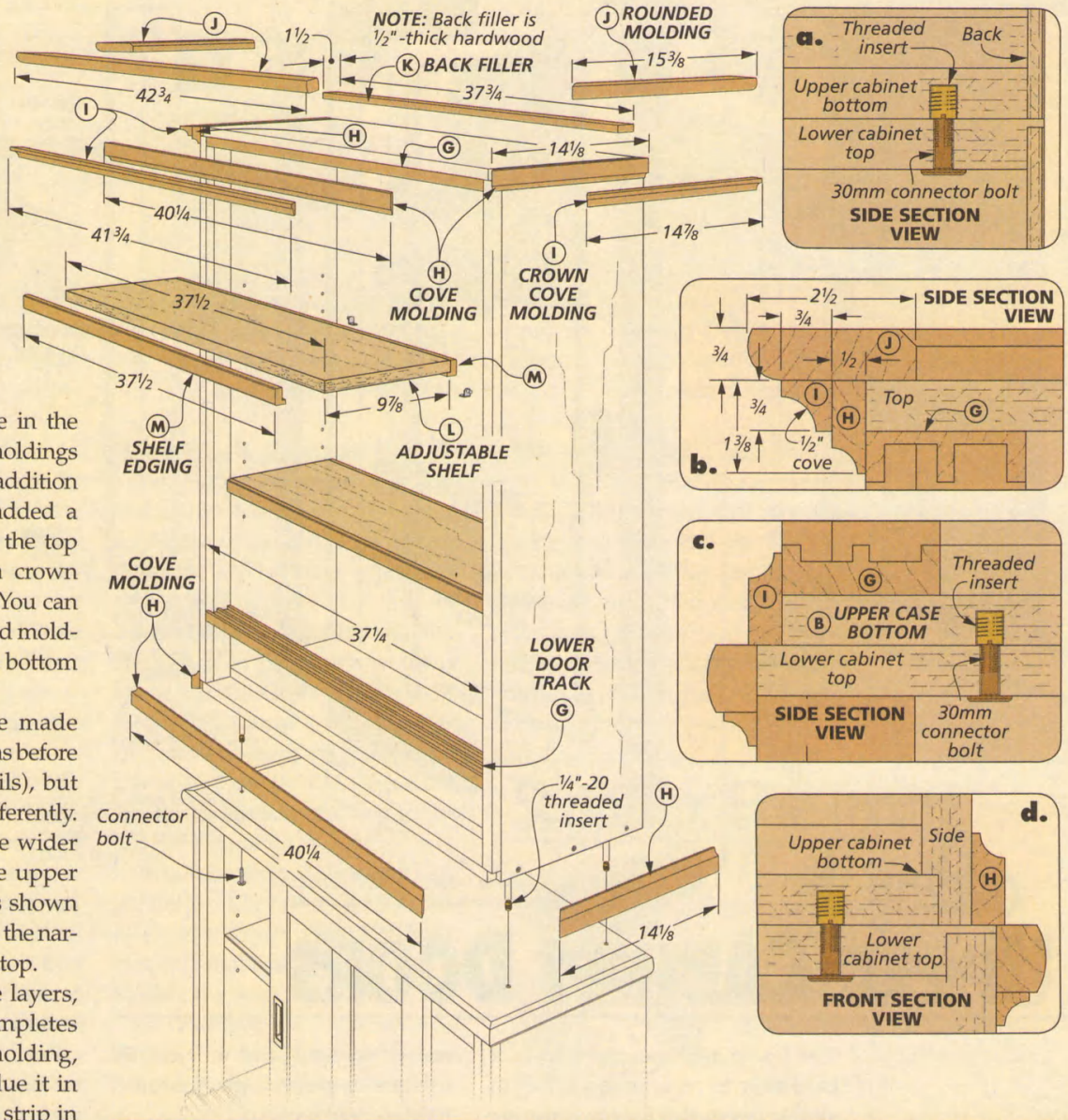

How-To: Connecting the Cabinets

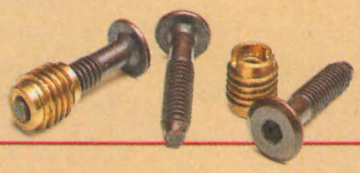

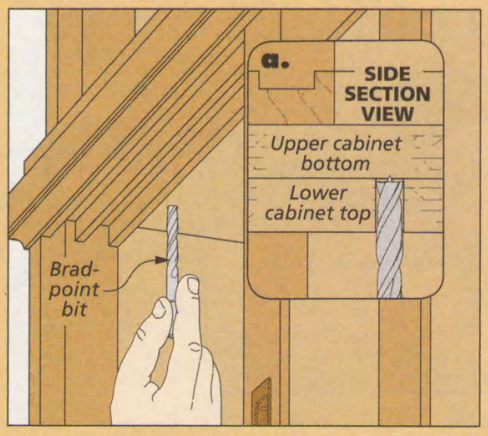

Mark the Spot. *Use a brad-point drill bit to mark the exact hole location for the threaded inserts on the bottom of the upper cabinet.*

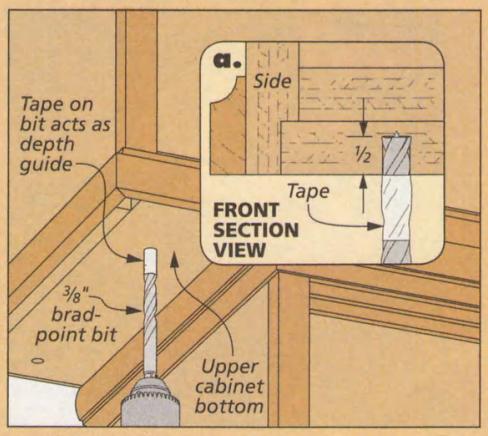

Drill the Hole. *Now slide the cabinet over and drill the hole for the threaded inserts. A piece of tape on the bit serves as a depth guide.*

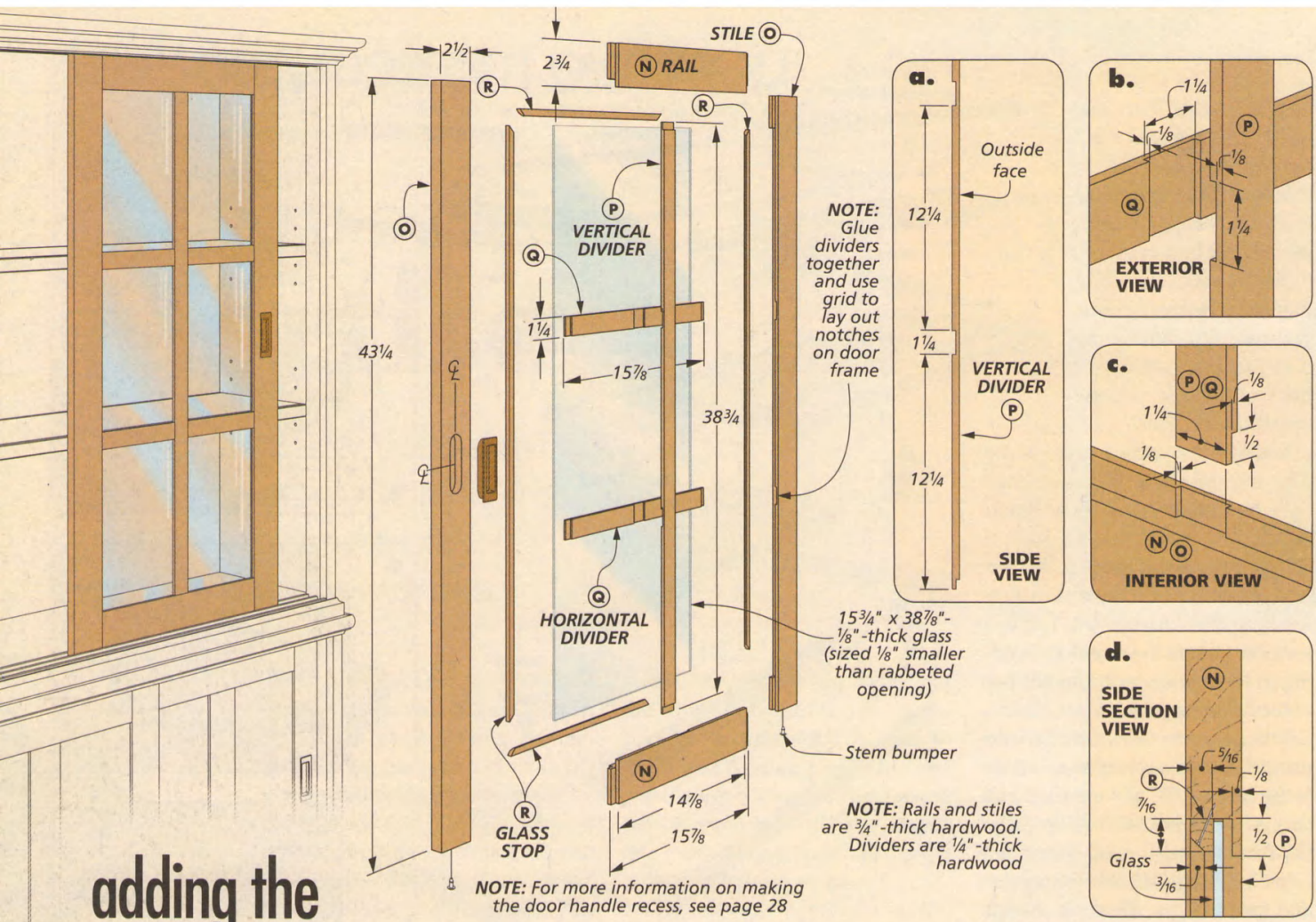

NOTE: For more information on making the door handle recess, see page 28

adding the UPPER CABINET DOORS

The last major operation to take care of is to make another set of sliding doors, this time to complete the upper cabinet. As you can see in the drawing above, the design is similar to that of the lower cabinet doors. But for this cabinet I've added vertical and horizontal dividers to give the glass doors a divided light look.

RAILS & STILES. Just as you did earlier for the lower cabinet doors, start by cutting the rails and stiles to final size. Then cut the grooves and the stub tenons. Don't forget to drill holes for the stem bumpers in the bottoms of the stiles.

At this point, the technique for making the doors departs from the earlier method. You'll need to glue up the rails and stiles now, and set them aside to dry.

Before you can add the dividers, you have to rout away the inside

How-To: Cut Divider Half Laps

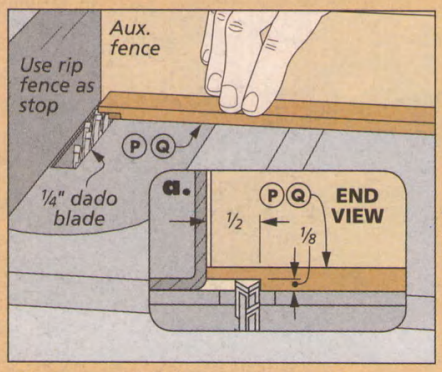

Shallow Rabbets. *With these thin workpieces, sneaking up on the correct blade height is the key to good results.*

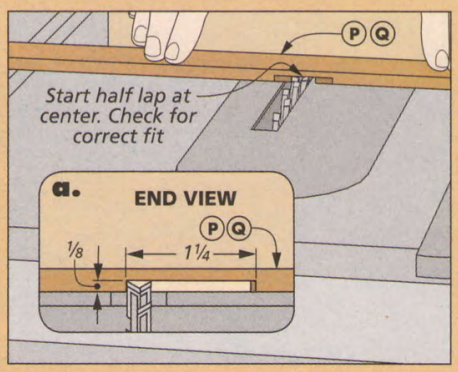

Centered Cut. *Using the rip fence as a stop, cut the workpiece and flip it to slowly widen the half lap for a good fit.*

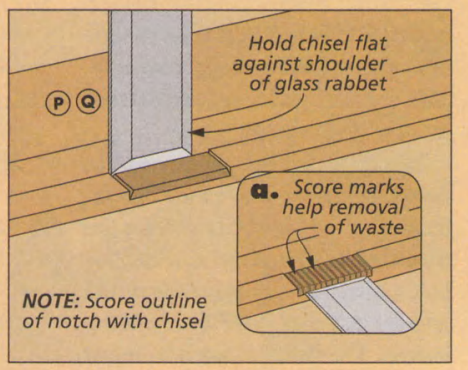

Notch the Rails and Stiles. *A chisel makes short work of the notches that will hold the dividers in place.*

lip of the grooves. The drawing on page 37 shows you how to do this.

DOOR PULLS. You can also rout the recesses for the door pulls now. For this, use the same technique as you did before on the doors of the lower cabinet.

DIVIDERS. To get started on the dividers, I resawed and planed some of the stock down to 1/4" thick. Since the pieces are only 1 1/4" wide, you can resaw it at the table saw safely and easily. Then, plane it to final thickness.

The dividers are assembled with half-lap joints. Detail 'a' on the opposite page shows the locations on the vertical dividers. The notch in the horizontal divider is simply centered on the length of the piece. The box at the bottom of the opposite page shows you how to cut the shallow half laps and the centered half lap on the horizontal dividers. After completing the cuts, glue up the dividers and set them aside to dry.

ADDING THE DIVIDERS. With the dividers glued up into grids, the next step is to mark the locations and cut the notches in the door frames that will house the ends of the dividers. Lay the assembled dividers on the doors and mark each position. Use a chisel to cut a shallow notch for the ends of the dividers. The right drawing in the How-To box on the opposite page shows you the technique. When you've completed the notches, simply glue the dividers in place.

GLASS STOP. The last step before adding the glass is to make some glass stop. The box above shows you an easy way to do this. Once you've finished, simply miter the pieces to length. After fitting the glass, you attach the stop with small brads. This technique makes it easy to replace the glass in case it's ever damaged in the future.

After applying the finish, you're ready to pick the perfect spot in your home for the cabinet. W

How-To: Make Thin Glass Stop

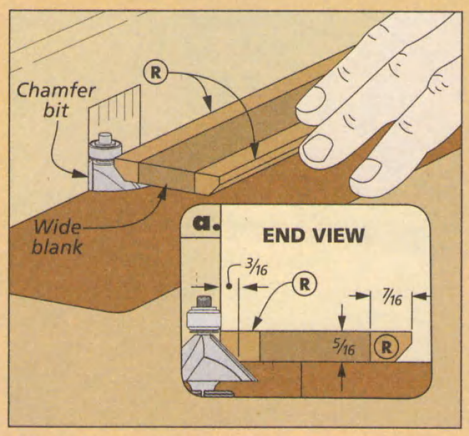

Chamfer the Edges. *An extra-wide workpiece allows you to safely chamfer the edges of the glass stops.*

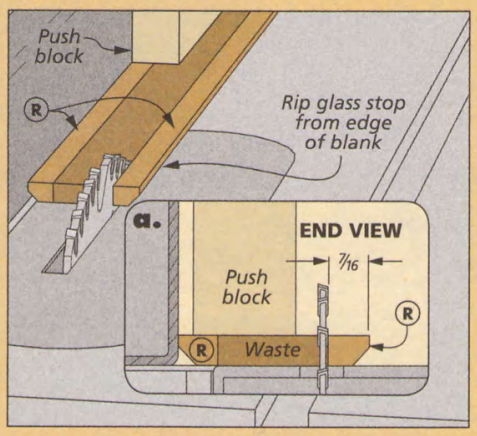

Rip to Width. *Set the rip fence so the workpiece falls to the outside of the blade and use a push block to make the cut.*

Materials, Supplies & Cutting Diagram (Upper Cabinet)

A	Sides (2)	3/4 ply. - 12 7/8 x 45 3/8
B	Top/Bottom (2)	3/4 ply. - 13 3/8 x 38 1/4
C	Bottom Filler (1)	3/4 ply. - 11 x 37 3/4
D	Back (1)	1/4 ply. - 39 x 45 3/4
E	Side Filler Strips (2)	1/4 x 1 5/8 - 44 1/4
F	Front Side Edging (2)	3/4 x 1 - 44 1/4
G	Door Tracks (2)	3/4 x 2 3/8 - 37 1/4
H	Cove Molding (1)	1/2 x 1 3/8 - 150 rgh.
I	Crown Cove Molding (1)	3/4 x 3/4 - 75 rgh.
J	Rounded Molding (1)	3/4 x 2 1/2 - 75 rgh.
K	Back Filler (1)	1/2 x 1 1/2 - 37 3/4
L	Adjustable Shelf (2)	3/4 ply. - 9 7/8 x 37 1/2
M	Shelf Edging (4)	3/4 x 1 - 37 1/2
N	Door Rails (4)	3/4 x 2 3/4 - 15 7/8
O	Door Stiles (4)	3/4 x 2 1/2 - 43 1/4
P	Vertical Dividers (2)	1/4 x 1 1/4 - 38 3/4
Q	Horizontal Dividers (4)	1/4 x 1 1/4 - 15 7/8
R	Glass Stop (1)	5/16 x 7/16 - 150 rgh.

- (4) Stem Bumpers
- (4) 1/4"-20 Brass Threaded Inserts
- (4) 1/4"-20 x 30mm Connector Bolts
- (8) Shelf Supports
- (2) Recessed Pulls w/Screws
- (14) #6 x 5/8" Fh Woodscrews
- (12) #8 x 1 1/2" Fh Woodscrews
- (2) 15 7/8" x 37 3/4" Glass Panels (1/8" thick)

3/4" x 9 1/4" - 84" Cherry (5.4 Bd. Ft.)

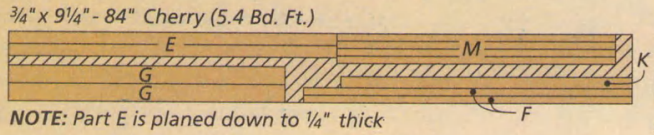

NOTE: *Part E is planed down to 1/4" thick*

3/4" x 9 1/4" - 84" Cherry (5.4 Bd. Ft.)

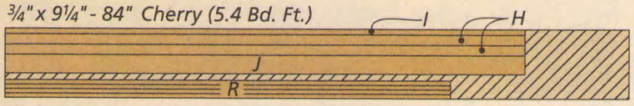

NOTE: *Parts H and K are planed to 1/2" thick. Part R is planed 7/16" thick*

3/4" x 9 1/4" - 96" Cherry (6.2 Bd. Ft.)

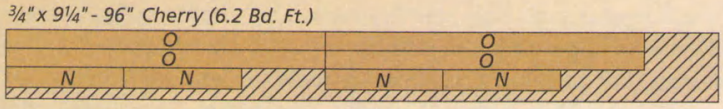

ALSO NEEDED: *One 48" x 96" Sheet of 3/4" Cherry plywood*
One 48" x 48" Sheet of 1/4" Cherry plywood

3/4" x 3 1/2" - 72" Cherry (1.8 Bd. Ft.)

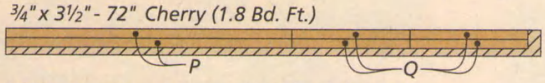

NOTE: *Parts P and Q are planed to 1/4" thick*

top tips for Flawless Miters

Tight-fitting miters that are made with ease can be a challenge. But take a look at these techniques for a better fit in the corners.

Miter joints appear to be simple at first glance — just two 45° cuts. But if you've ever made a mitered frame, you know there's a bit more to the process than just making the cuts.

For perfect-fitting miters, you'll need to start by making sure your saw and miter gauge are well tuned. Keeping the workpieces oriented properly during the cuts can prevent tearout. Plus, the order of the cuts make a difference. I'll talk more about that later. My first step is to check the saw settings.

SETTING UP THE SAW

There are a number of settings on a table saw that can change over time due to vibration, saw dust accumulation, or lack of proper lubrication. So before I make the first cut, I check the saw settings to be sure my saw is running at peak performance. The checks include aligning the blade with the miter gauge slots, checking the angle stop, the fit of the miter gauge in the slot, and the accuracy of the miter gauge head.

BLADE ALIGNMENT. Your saw will work at its best if the blade is perfectly parallel with the miter gauge slots. If it's not, you'll see cuts with burned or uneven edges. Checking blade alignment is something that needs to be done on a regular basis, since vibrations in the saw can cause changes in alignment. So even if you've checked the setting before, now is a good time to check it again. Each saw is different, so you'll need to refer to your owner's manual for the proper adjustments. After the blade is aligned, you can check that it's square to the table.

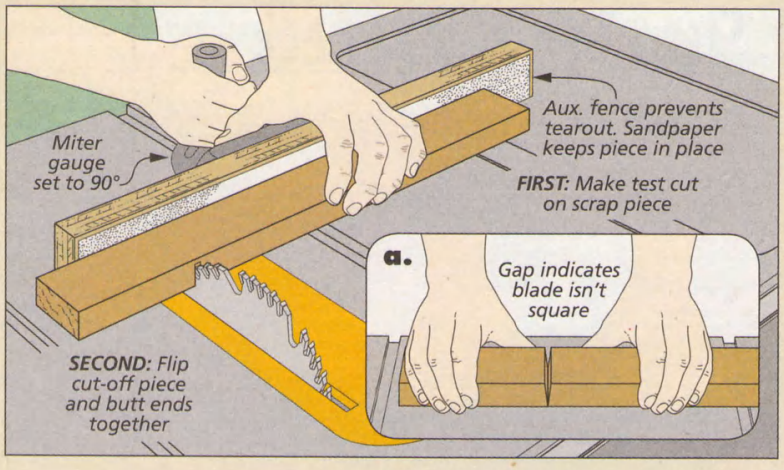

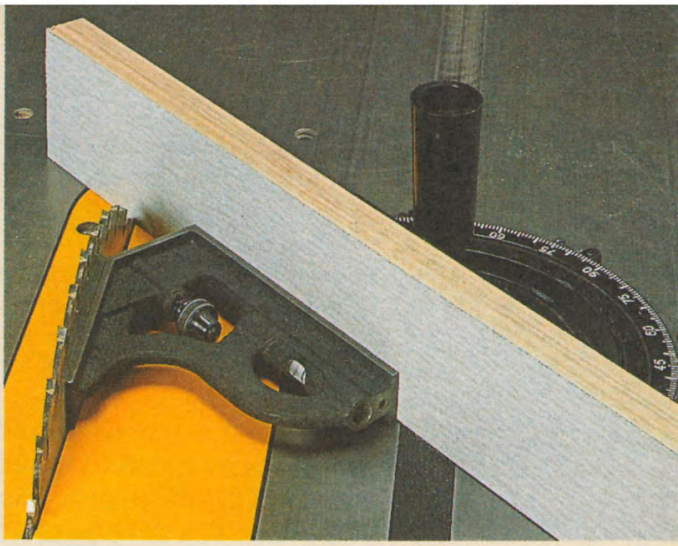

▲ Use the head of a combination square to check the accuracy of the miter gauge.

SQUARE THE BLADE. If the saw blade isn't square with the tabletop, the cuts you make won't be square either. And that means miter cuts won't have a tight fit. But there's a simple way to fix this.

The 90° stop on your table saw determines where the blade will stop in the upright position. But the stop can shift out of adjustment, so check this setting with a square before making a cut.

The easiest way to test for a blade that's square with the table is to follow the steps in the upper left drawing. I use a scrap piece to start the process. After making a crosscut, turn one end over and check for a gap between the ends. If the two pieces butt perfectly, you're in good shape. If you do find a problem with the 90° stop, just make a small adjustment. Then continue to make test cuts and adjustments until the joint is tight. After the stop is set, you can move to setting up the miter gauge.

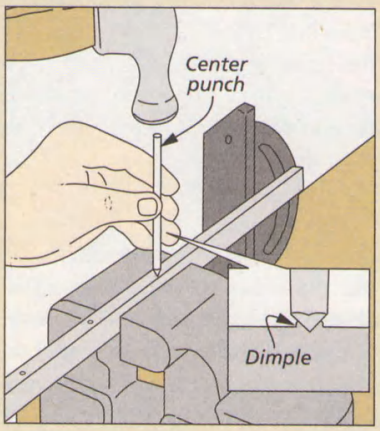

Dimples. *To take up the play in the miter gauge, strike the side of the bar with a center punch.*

MITER GAUGE SETUP. After repeated use, the miter gauge bar can wear down and possibly have too much play in it. The gauge should glide effortlessly in the slot without much movement from side to side. If you notice any play in the gauge, there's a quick way to fix this. Take a look at the drawing at left for more information. After you've determined that the gauge moves smoothly, you can add an auxiliary fence to the gauge.

AUXILIARY FENCE. Adding an auxiliary fence on the miter gauge is probably the most important and least expensive accessory you can add to your saw. I always use an auxiliary fence to support the workpiece and prevent tearout. Any square, straight, flat piece of plywood will make a good fence. When the fence is in place, it's a good idea to add a strip of self-adhesive sandpaper (150-grit). This helps to keep the workpiece from "creeping" along the fence during a cut.

SET THE DIRECTION. The final part of the setup is setting the direction of the miter gauge. Take a look at the drawings and photo below to see why setting the miter gauge correctly can make a big difference.

SET THE ANGLE. The second part of setting the gauge is to make sure it's angled at 45°. But here again, the detent on the gauge may not be accurate. So I use the head of a combination square to check (upper right photo).

NEXT STEP. With the saw tuned, you're ready to produce accurate cuts.

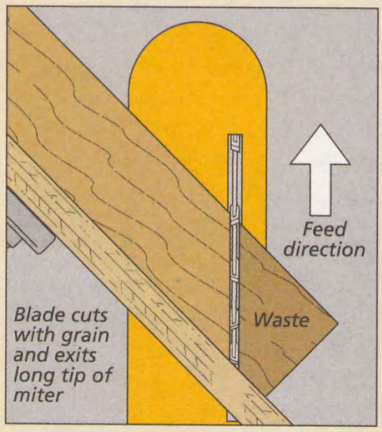

Facing the Blade. *You'll get a smoother cut if you angle the miter gauge toward the blade.*

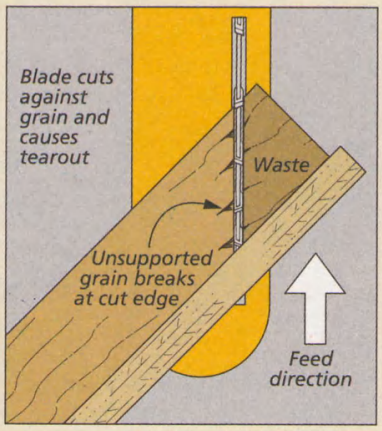

Away From the Blade. *With the miter gauge facing away from the saw, the grain tends to tear out.*

You can see the difference in the two cuts. The front board was cut with the miter gauge facing away from the blade. ▼

Cutting Miters

Setting up your saw properly will get you halfway to flawless miters. The rest is achieved through the cutting process. The process of cutting miters depends on the type of miter you are cutting. There are two types of miters — face (or frame) miters and end (or case) miters. A face miter is simply two mating corners cut at 45°, such as those you would cut for a frame. An end miter has a 45° miter on the end and mates with a matching piece to form a case or box.

FACE MITERS

There's a simple technique I like to use when cutting face miters. I cut the miters on one end of each workpiece and then set up a stop block to miter the pieces to length.

ONE CUT AT A TIME. The first cut is pretty simple. Your goal is to miter one end of each workpiece. I make this cut on all four pieces (left drawing below). This way, you won't have to switch back and forth between setups. When you've completed the cut, be sure to slide the workpiece away from the blade before you bring the miter gauge back. This way, you don't take the chance of ruining the cut by pulling the workpiece back across the blade.

HAND POSITION. Another thing to keep in mind is applying even pressure as the workpiece passes through the blade. Notice the position of the hands in the drawings at the bottom of the page. With the miter gauge on the left side of the blade, I use my left hand to hold the workpiece firmly against the fence and down on the table. Then I use my right hand to push the miter gauge and guide the workpiece through the blade. Working this way will give you more control over the workpiece and the miter gauge. Plus, your hands are in a safe position while operating the saw.

SECOND CUT. The second cut establishes the miter on the opposite end of the workpiece, as well as trimming it to final length. For this reason, you'll need to make sure that the pieces on opposite sides of the frame are the same length. I use a mitered stop block clamped to the auxiliary fence to ensure that the pieces are the same length (right drawing, below). The drawing in the left margin shows the block I made for this purpose. Just place the cut end of the workpiece against the mitered stop block to make the cuts in each workpiece.

There's one thing to note about using this setup. The stop block will trap the workpiece and you won't be able to slide it away from the blade like you did with the previous cuts. You have two options when you finish the cut. You can move the workpiece past the blade and then

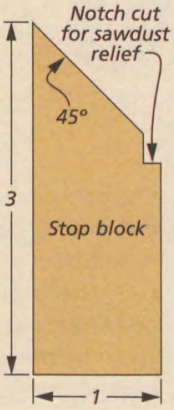

Shop Tip: Miter Check

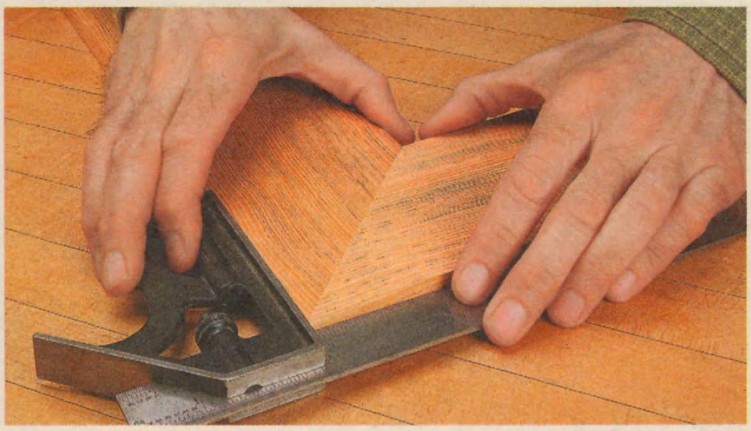

▲ After making a test cut miter, check that the corners come together to form a true 90° angle. If the miters aren't square, check the settings on your saw and miter gauge again to be certain that you are cutting a true 45°.

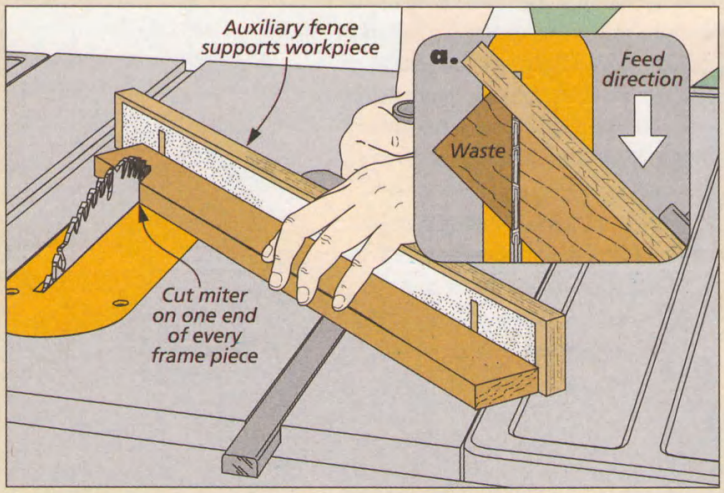

First Cut. *Cut one end on all four workpieces first. Later, you'll cut the workpieces to length. Turning the miter gauge toward the blade will give you a cleaner cut, with less tearout on the miter.*

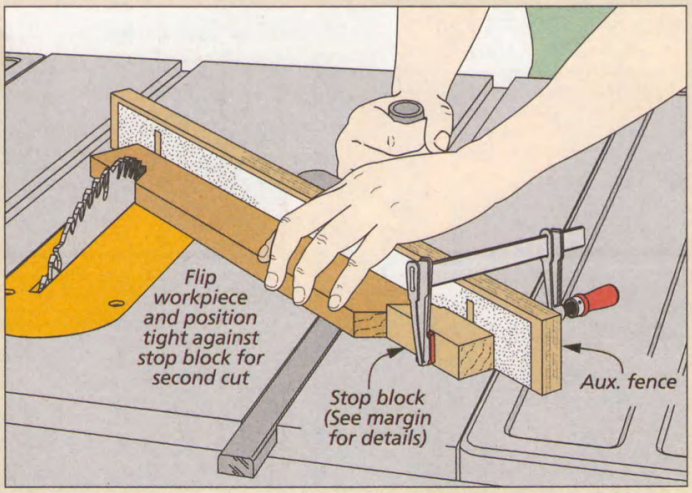

Second Cut. *When you're cutting a frame, it's important that the opposite pieces are exactly the same length. Using a mitered stop block ensures that the workpieces are identical.*

remove it or you can shut off the saw and wait until it comes to a complete stop after each cut.

END MITERS

The other type of miter is an end miter. This miter is cut across the grain of a workpiece, like those you cut for the mitered corners of a box. This cut is usually made with the saw blade tilted rather than the miter gauge angled. And this requires a slightly different setup on the saw.

SETUP. All the saw checks I discussed on the first two pages still apply to end miters, but there's one other check to make before you start. I always check that the blade is tilted exactly 45° by using the head of my combination square. Wedge the head between the blade and the saw table. There shouldn't be any gap between the two.

The other important setup for end miters is making sure you don't trap the workpiece when you make the cut. This is accomplished easily by positioning the miter gauge so that the blade tilts toward the waste side of the cut (drawing below).

MAKING THE CUT. With these two setup tasks complete, you're ready to make the cut. But I don't do it with just one cut. The resistance generated during a heavy cut can cause the blade to distort. For this reason, I like to make a couple passes on the saw. The first cut removes most of the waste material. The second cut shaves off the remaining waste. Making a final, light pass cleans up the cut and removes any inaccuracies. The last thing you want is a dip in the middle of the miter.

SMALL PARTS. The final technique I want to mention is mitering small parts. Check out the box below for some tips on cutting miters on small workpieces using a sled.

By checking your saw first, following the setup procedures, and then using simple tips and techniques, you can cut flawless miters for any project.

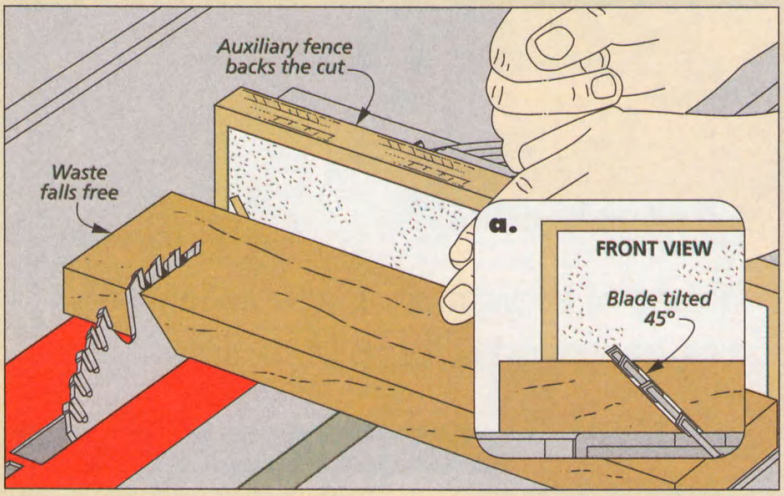

End Miters. *When cutting an end miter, make certain that the blade is tilted away from the workpiece. You can slide the workpiece away from the blade on the first cut. Move it past the blade on the second cut.*

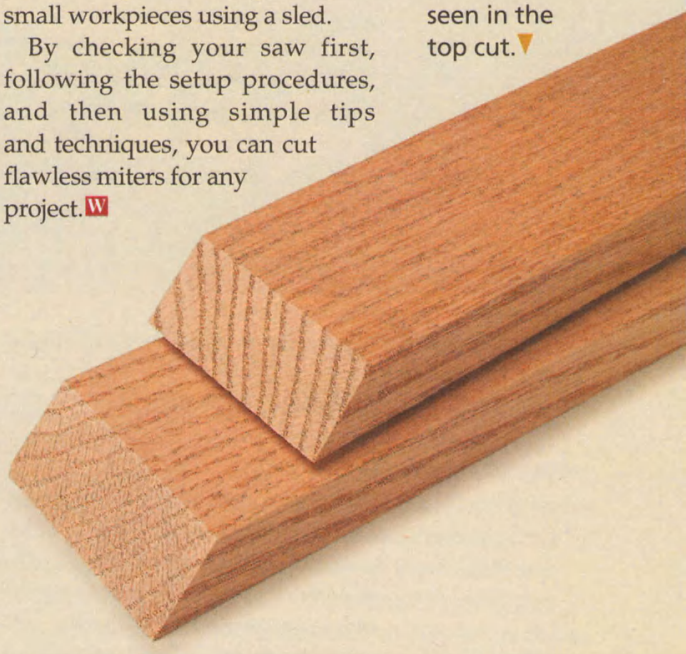

A final, light pass results in a cleaner miter as seen in the top cut.

How-To: Cut Small Parts Safely

Small workpieces present a special challenge as they can easily chip, tear out, or break when they contact the saw blade. A simple sled will prevent this from happening and you'll have better control over the workpiece, too.

A sled allows the blade to make the cut while the workpiece is firmly supported by the fence. This results in smoother action and a cleaner cut. And you don't take the chance of running over uneven surfaces on the table with a small part.

As you can see in the photo at right, the sled is nothing more than a piece of hardboard with a fence glued on the front and back edges. Then it's clamped to the miter gauge.

I pre-cut the slot kerfs in the sled on the table saw and added a piece of adhesive sandpaper. This will keep a small workpiece from creeping in the sled while you make the cut.

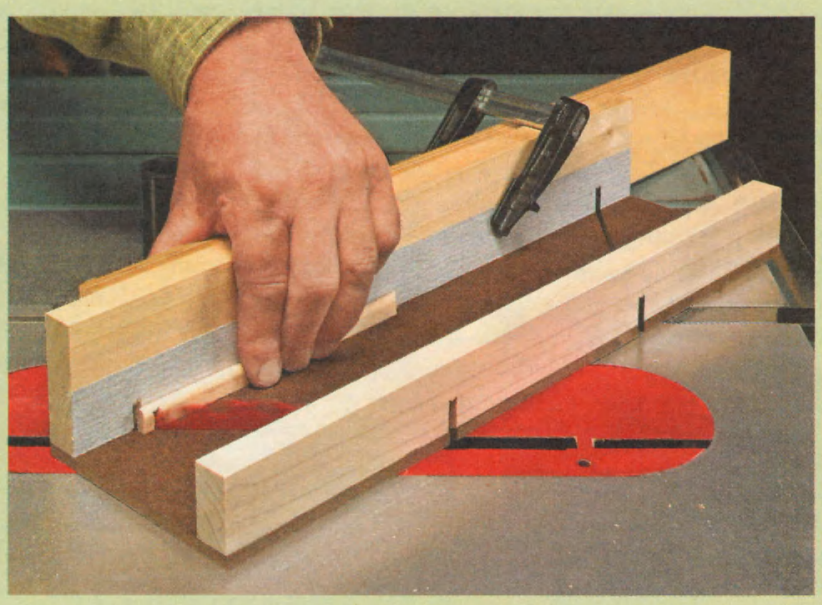

versatile Penetrating Oil Finishes

A perfect balance between ease of application, appearance, and protection makes penetrating oil a standby for many woodworkers.

When it comes to finishing, most woodworkers don't like to take chances. A guaranteed good result is often the main, sometimes the only, requirement. This is one reason why wipe-on, penetrating oil finishes are so popular. They're easy and nearly foolproof to apply, offer good protection, and the soft sheen and color of the thin "in-the-wood" film is hard to beat.

THE DIFFERENCE. The attractive appearance of a penetrating oil finish stems from the nature of the film it forms. Unlike varnish, lacquer, or shellac, a penetrating oil doesn't lay on the surface to create a thick, built-up film. When applied, it seals the wood by soaking in and forming a very thin film at the surface, as illustrated in the drawing at right. The texture and figure of the wood is not obscured and the natural color is enhanced, as is pretty apparent in the photo above. Another benefit is that tinted penetrating oils allow you to apply stain and finish in one step.

SURFACE FINISH VS. PENETRATING FINISH

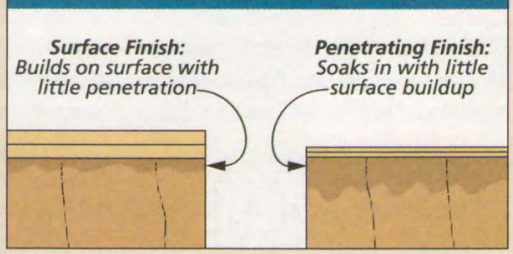

SO WHAT IS IT? There's a fair amount of confusion about the makeup of penetrating oils. Often called Danish oils, they form a distinct category of finish. Although there's no standard formulation, the recipe is pretty basic. A penetrating oil is nothing more than a mixture of a drying oil (such as tung or linseed oil), a varnish, and mineral spirits. In finishing jargon, they're termed an oil/varnish mix.

Each of the ingredients plays a pretty specific role. The mineral spirits thins the mixture to increase penetration, the oil adds color and slows the drying time to make the application easier, and the varnish adds protection and durability.

HOW DO YOU KNOW? Most woodworkers simply know a penetrating oil finish by a particular brand name — *Minwax Antique Oil* or *Watco Danish Oil* for example (photo at left). But beyond relying on past experience and reputation, there is often no way to tell what's in a particular "oil" finish. The terms oil, tung oil, and wipe-on are used extensively on labels.

▼ The different brands of penetrating oil finish are sold with a wide range of descriptive names.

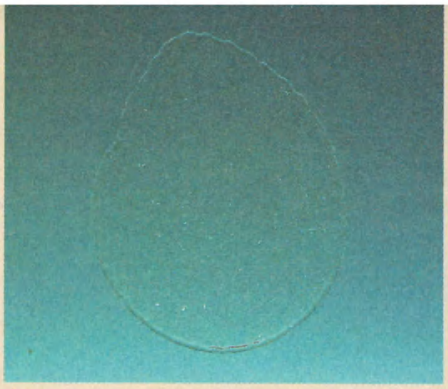

▲ A dollop of straight varnish will dry to a clear, smooth, hard film.

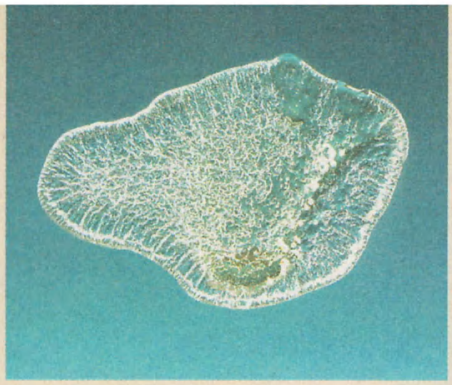

▲ Pure oil, such as tung or linseed, will form a soft, wrinkled patch.

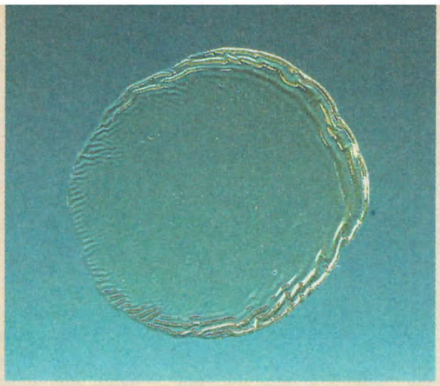

▲ Penetrating oil is identified by its clear center and wrinkled border.

But only some of these products are a true oil/varnish blend.

However, there is an easy way to tell what's in your finish. You can perform a simple visual drying test. Pour a small puddle of finish on a smooth, non-porous surface, like a sheet of glass, then let it dry and observe the result. The photos above show the clear distinction.

MAKE YOUR OWN. A good way to be certain you're applying a penetrating oil is to make you own. I like a mixture of one part polyurethane varnish, one part mineral spirits, and one-half part boiled linseed oil. You can vary the recipe to suit your needs. A greater proportion of oil to varnish will ease the application, but decrease the durability.

USING A PENETRATING OIL. The box below provides a few tips on using a penetrating oil finish. In essence, if you can rustle up a clean rag or two, the application is a "no-brainer." You simply wipe on enough finish to thoroughly soak the surface, let it penetrate for five or ten minutes, and then wipe off any excess. A second coat can usually be applied in six to eight hours. It's not really possible to build up a thick film with a penetrating oil and this isn't the goal. So applying more than three coats generally isn't necessary.

SANDING. The penetrating nature of the finish and the thin film left behind means that the surface needs to be as smooth as possible. The finish won't fill in blemishes or hide rough sanding scratches. So when I'm planning on applying a penetrating oil, I always finish sand to at least 220-grit. And you want to make certain all the surfaces are sanded consistently.

BLEEDBACK. Open-grained woods, such as oak, walnut, or mahogany, tend to soak up more finish. This can lead to an annoyance referred to as bleedback. As the solvent in the mixture evaporates from the pores, it pulls out the oil and varnish leaving shiny scales on the surface. If these go unnoticed and are allowed to dry and harden, they can be a pain to remove.

The simple solution is to keep watch for the first couple hours after applying the finish and wipe away the spots when they appear. Once the initial coat has been applied, the pores will be sealed and bleedback shouldn't recur with the subsequent coats.

REPAIRABILITY. The thin film left by a penetrating oil can be a liability and an advantage. The finish may not hold up well under heavy use, but if it's scratched, dinged, or simply worn, it can easily be repaired or renewed. First go over the area with fine sandpaper or steel wool. Remove the dust and wipe on a fresh coat of finish. The original sheen will be restored and at a minimum, the new finish will help disguise any damage.

Offering all this, the attraction for woodworkers is pretty apparent. Once you try it, don't be surprised if penetrating oil finds a permanent spot on your finishing roster.

How-To: Tips for Applying a Penetrating Oil

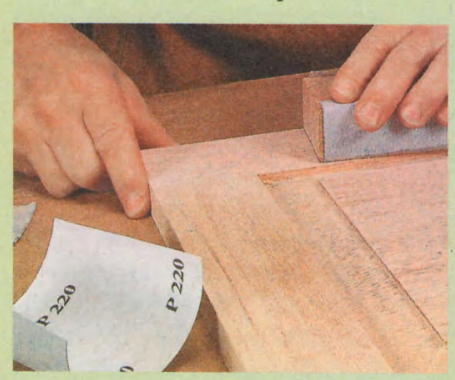

▲ Before applying a penetrating oil, the surface should be smooth and free of visible sanding scratches.

▲ Bleedback is controlled by simply wiping off the spots of finish before they have a chance to dry.

▲ The finish can be renewed or a blemish disguised by simply applying a "rejuvenating" coat.

loose-wedge Mortise & Tenon Joints

These traditional options for knock-down joinery offer strong, rigid construction along with a unique, hand-crafted look.

Knock-down construction is certainly not a modern invention. Furniture and other utilitarian items designed to be disassembled have been built for centuries. As it still is today, this was often simply a matter of making large pieces easier to move from place to place.

Traditionally, one of the common methods of building this type of practicality into a project was to incorporate loose-wedge mortise and tenon joints. The basic concept is pretty easy to understand. Rather than glue or pin the tenon into the mortise, the tenon is temporarily locked in place by inserting a large, removable wedge. You simply tap out the wedge, and the joint can easily be taken apart.

You'll find that the connection formed by a loose-wedge mortise and tenon can be surprisingly sturdy and durable. It also offers the advantage of accommodating seasonal wood movement — a tap on the wedge tightens the joint. But possibly the best selling point is the interesting, almost puzzle-like, appearance of these joints. It's guaranteed to create curiosity and draw attention.

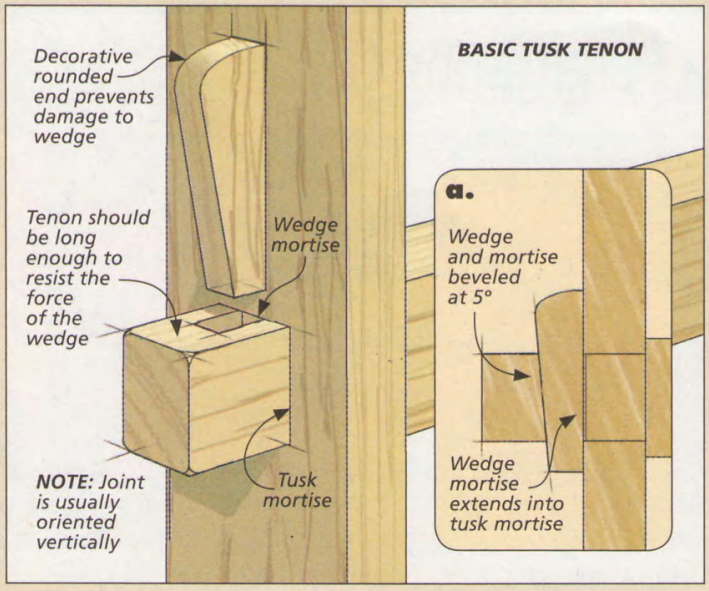

The most recognizable take on this joint is the basic tusk tenon shown in the drawings at left. It's often seen as a design element of Craftsman-style furniture. However, there are a number of other interesting variations of this type of joint. And they're just as useful today as in the past. To get you thinking, I'll describe a few examples of different loose-wedge mortise and tenon joints.

BASIC TUSK TENON

As I mentioned, the drawing at left illustrates a basic tusk tenon joint. You start the joint by making a through mortise and tenon. The tenon (or tusk) is made extra-long to accommodate a beveled wedge mortise. This mortise is positioned so that when the wedge is inserted, the tenon shoulders are pulled snugly against the mortised piece.

There are a handful of fine points that I should mention. The wedge is usually oriented vertically to prevent it from working loose. And for maximum "draw," the outer face of the wedge and wedge mortise

should be beveled to a shallow angle of about 5°. The inner face of the wedge mortise extends slightly into the main mortise. This ensures that the joint will close up when the wedge is driven home.

The pressure exerted by the wedge on the outer face of the wedge mortise is how the work gets done. This means that you want the angle of the wedge and the mortise to be a perfect match. And to avoid splitting, be sure to leave adequate material beyond the wedge mortise at the end of the tenon — a minimum of ½".

DOUBLE-WEDGE TUSK TENON

A double-wedged tusk tenon works on the same principle as the basic tusk tenon, but the makeup of the joint is slightly different. As shown in the upper right drawing, this joint uses two wedges inserted into the wedge mortise from opposite sides to lock the tenon in place.

The difference is that the use of two opposing wedges with identical bevels means that the outer face of the wedge mortise can be left square. And for obvious practical reasons, a double-wedged tusk tenon works best if the wedges are oriented horizontally.

FORKED-WEDGE TUSK TENON

At first glance, a forked-wedge tusk tenon (shown in the lower left drawing) may seem more fantasy than useful woodworking joint. But once you put it to the test, you'll find that although it's a bit of a challenge to make, it works like a charm and looks great.

The twist is that the tusk tenon is not mortised for a wedge. Instead, a tapered wedge notch is cut along both cheeks of the tenon. A "forked" wedge fits over the tenon and bears against the tapered shoulders of the wedge notches, locking the pieces rigidly together. A big advantage is that maximum wedging force can be applied with virtually no chance of the tenon splitting.

The criteria for positioning the wedge notches and the bevel angle is the same as for a basic tusk tenon. The notches should be deep enough to provide good bearing surface for the wedge — at least ⅛".

The slot in the wedge is sized for an easy fit over the tenon and made long enough so that it doesn't bottom out when inserted.

DOVETAILED AND WEDGED TENON

A dovetailed and wedged tenon joint has a bit of mystery to it. When assembled, it's not completely obvious how it works. But when you look inside the joint, as in detail 'a' in the right drawing below, it makes perfect sense.

Like the others, the joint is based around a through mortise and tenon. But as you can see, the mortise is cut with ends that flare outward, like a dovetail socket. The lower edge of the tenon is cut to match the angle of the mortise ends. When a wedge is inserted along the upper edge of the tenon, the downward force pulls the tenon deeper into the mortise and locks the joint very securely.

When making the joint, the narrow end of the mortise has to be at least as wide as the widest part of the tenon. And a fairly steep angle of 10° or 12° will help maximize the wedging action.

The list of suitable uses for these joints is extensive. A couple of obvious examples are trestle tables and workbenches. But these joints can also be incorporated into casework, shelving, or bed frames.

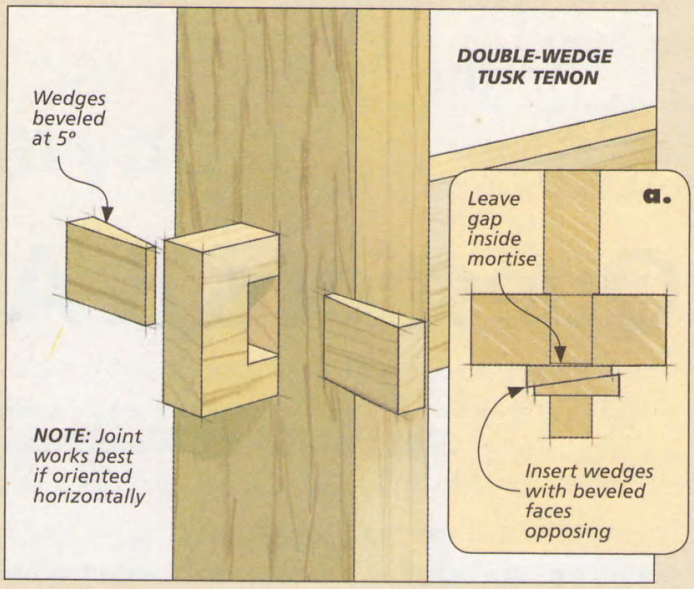

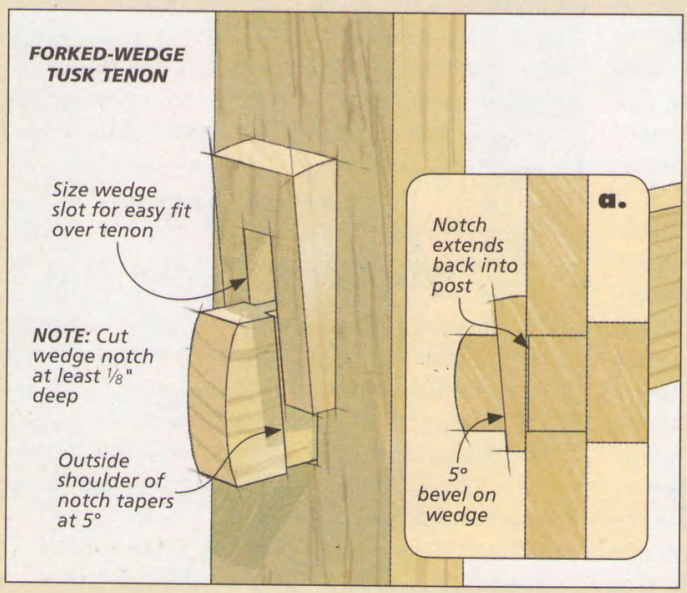

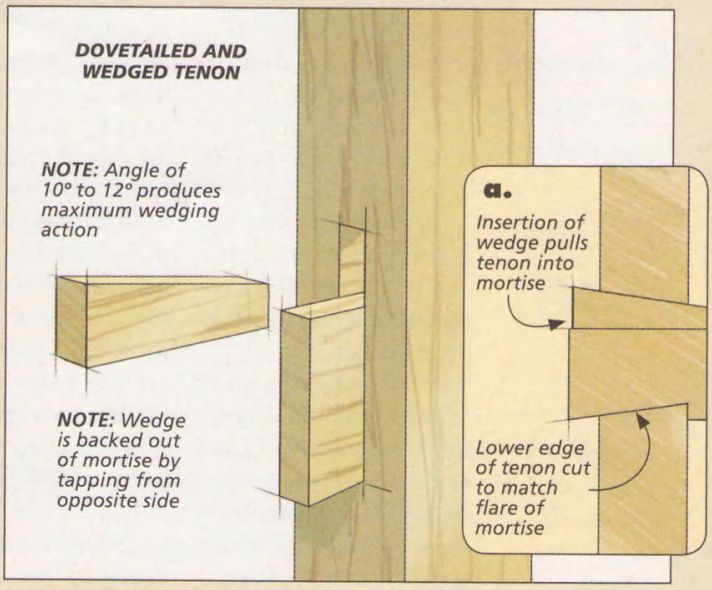

Questions & Answers

Shelf Life of Finishes

Q ***I have several cans of leftover stains, paints, and finishes in my shop. Is there a rule of thumb on how long these products remain fresh?***

Joe Sullivan
El Monte, California

A If left in the unopened can and stored in a cool, dry environment, it's not unusual for many finishing products (such as varnishes, lacquers, paints, and stains) to remain "fresh" for several years.

Once the can is opened however, all bets are off. The reason for this is that the main enemy of most finishes is oxygen. After the lid is removed and the contents are exposed to air, the finish will start to cure.

How fast this process occurs depends on the type of finish, and how well you seal the lid when replacing it.

So how can you tell if the product left in the can is still good? I start by taking a close look at the contents.

FINISHES. Typically, most shellacs, varnishes, polyurethanes, and lacquers thicken as they get older. If the finish has thickened only slightly (to the consistency of syrup), you may be able to salvage it by adding the appropriate solvent. But if it's starting to resemble molasses, no amount of thinner will bring it back.

PAINTS & STAINS. Paints and gel stains can develop a "skin" on the top. This skin prevents air from reaching the contents below. You'll often find that once you peel off the skin, the product underneath is still good.

Just be aware that any pigments or flattening agents will settle to the bottom of the can. So you'll need to stir the contents extremely well before use. And you'll also want to pour it through a strainer to remove any "chunks."

TEST IT OUT. If you're still in doubt about a can of finish or stain, the best thing to do is apply a little to a test piece to see if it flows out and dries as quickly as it should.

PRECAUTIONS. Fortunately, there are a few steps you can take to maximize the life of most finishing products. First, before replacing the lid, take a minute to wipe off the rim of the can thoroughly to ensure a good seal.

Next, make sure the lid is fully seated by giving it a few light taps with a rubber mallet. I also write the date on the can so I know when I first opened it.

▲ Pouring large cans of finish into smaller containers decreases the amount of excess air in the can, which can cause the finish to dry out.

If you have just a small amount of finish left, it's a good idea to pour the remainder into a smaller container (photo above). This will reduce the amount of excess air inside the can, which can dry out the finish.

Finally, keep in mind that after spending a lot of time building a project, it's not worth trying to save a few dollars by using a can of finish that's past its prime. W

Do you have any questions for us?

If you have a question related to woodworking techniques, tools, finishing, hardware, or accessories, we'd like to hear from you.

Just write down your question and mail it to us: Woodsmith Q&A, 2200 Grand Avenue, Des Moines, Iowa 50312. Or you can email us the question at: woodsmith@woodsmith.com.

Please include your full name, address, and daytime telephone number in case we have questions.

Sources

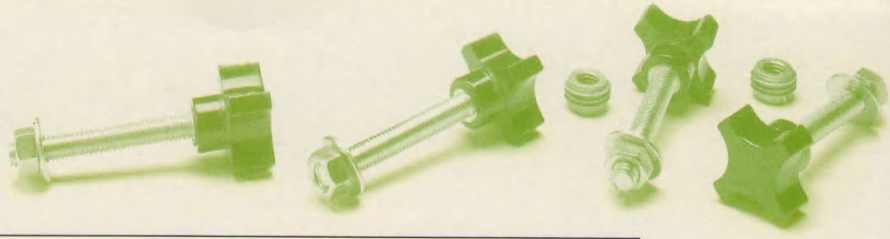

SUPER GLUES

Super glue is great to have on hand for all-around use in the shop. You can find an assortment of super glues, de-bonders, and accelerators at most hardware stores and home centers.

KM-1 KERFMAKER

The *KM-1 Kerfmaker* is sold exclusively through *Bridge City Tool Works*. You can find more information on the *KM-1*, including a link to an online video showing the tool in use, at the *Bridge City Tool Works* website (shown in the margin at right).

A word about ordering from *Bridge City Tool Works*. Like most *Bridge City* items, the *KM-1* is made in small batches to fill existing orders (plus a few extras). If *Bridge City* doesn't have the *Kerfmaker* in stock at the time you place your order, ask about having your name put on the waiting list for the next production run.

POTPOURRI BOX

Aside from the wood, the only supply you'll need to build the potpourri box on page 16 is a small piece of window screen. You can purchase window screen material at most hardware stores or home centers.

To finish the project, I stained the box only (not the lid) with *General Finishes' Gel Stain (Prairie Wheat)*. Then I applied a couple coats of a wiping varnish (*General Finishes' Seal-a-Cell*).

The pewter insert used on the alternate lid was purchased from *Craft Supplies USA* (064-0052).

VENEERED ACCENT TABLE

The focal point of the accent table on page 20 is the veneered top. I used paper-backed veneer for this project. The paper backing helps to prevent the veneer from splitting and cracking. The one downside is that it's only sold in large sheets, so you end up with quite a bit of leftover veneer. Paper-backed veneer is available from a couple of the sources shown in the margin at right.

In addition to the veneer, you'll also need some 1/8"-wide, dyed inlay strips. These are available through the *Woodsmith Store*. And finally, to attach the top to the base, I used some tabletop fasteners from *Rockler* (34215).

I finished the table by first wiping on a coat of *General Finishes' Seal-a-Cell* to give the wood a warm color. This was followed by a couple coats of lacquer. Then I added a glaze to the finish, using *General Finishes' Gel Stain (Java)*. Simply wipe the stain on and then wipe it off again lightly, allowing some to remain in the crevices and corners. Finally, you can give the table another coat of lacquer.

SLIDING DOOR CABINET

Most of the hardware for the sliding door cabinet on page 30 was purchased from *Rockler*. This includes the stem bumpers (28373), threaded inserts (33183), connector bolts (31831), shelf supports (33902), and T-nuts (26070). The recessed pulls were ordered from *Lee Valley* (01X42.11). The glass for the doors was purchased at a local glass shop.

I stained the cabinet with a mix of three parts *Zar Stain (Cherry)* and one part *WoodKote Jel'd Stain (Cherry)*. After spraying on a couple of coats of lacquer, I added a glaze and a final coat of lacquer, just as described above for the veneered accent table. W

Online Customer Service

Click on *Magazine Customer Service* at **www.woodsmith.com**

- Access your account status
- Change your mailing or email address
- Pay your bill
- Renew your subscription
- Tell us if you've missed an issue
- Find out if your payment has been received

MAIL ORDER SOURCES

Project supplies may be ordered from the following companies:

Woodsmith Store
800-444-7527
Inlay Strips, Oscillating Spindle Sanders, Super Glues, T-Nuts, Threaded Inserts

Bridge City Tool Works
800-253-3332
bridgecitytools.com
KM-1 Kerfmaker

Craft Supplies USA
800-444-7527
woodturnerscatalog.com
Pewter Potpourri Lid

Constantines
800-443-9667
constantines.com
Inlay Strips, Paper-Backed Veneer

Lee Valley
800-871-8158
leevalley.com
General Finishes' Products, Recessed Pulls

Rockler
800-279-4441
rockler.com
Connector Bolts, General Finishes' Products, Shelf Supports, Stem Bumpers, T-Nuts, Tabletop Fasteners, Threaded Inserts

Veneer Supplies
veneersupplies.com
Paper-Backed Veneer

Woodsmith®

4-VOLUME LIBRARY SET

Get all 4 hardbound volumes of ***Woodsmith*** (Volumes 27 through 30). Each annual volume includes six complete issues, plus a table of contents and a handy index.

Regular Price $119.80
Subscriber Discount Price ..... $89.50 ***SAVE OVER 25%***

FREE SHIPPING on your entire order!

Individual volumes also available.
(Offer expires 5/31/10)

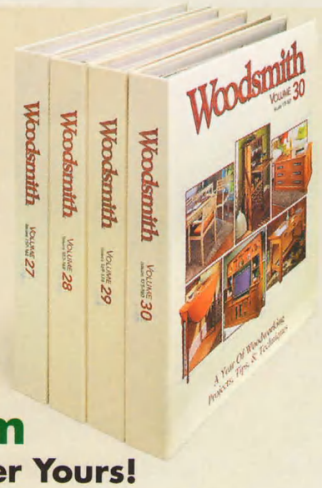

Go to Woodsmith.com
or Call 1-800-444-7527 Today to Order Yours!

looking inside
Final Details

▲ *Bookcase.* By simply omitting the upper doors, you can turn the display cabinet into a handsome bookcase with enclosed storage below. Turn to page 30 to find out about all the options.

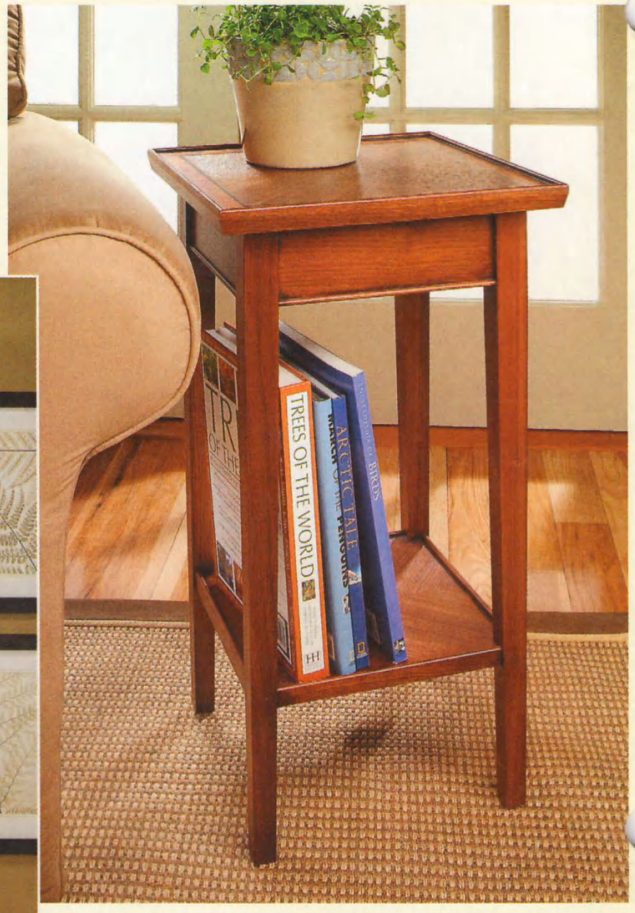

▲ *Accent Table.* It will be easy to find just the right spot for this compact, stylish table. The bonus is that while building it, you'll get to learn a new veneering technique. The plans start on page 20.

► *Potpourri Box.* If you're looking for a "short term" project, here is the answer. Straightforward construction along with two, attractive lid options make this one a winner. Check it out on page 16.